3 603 C51 100

Stand ~~07-12~~
Issue 08-06-12

Fig./Abb. 1

■ = 801

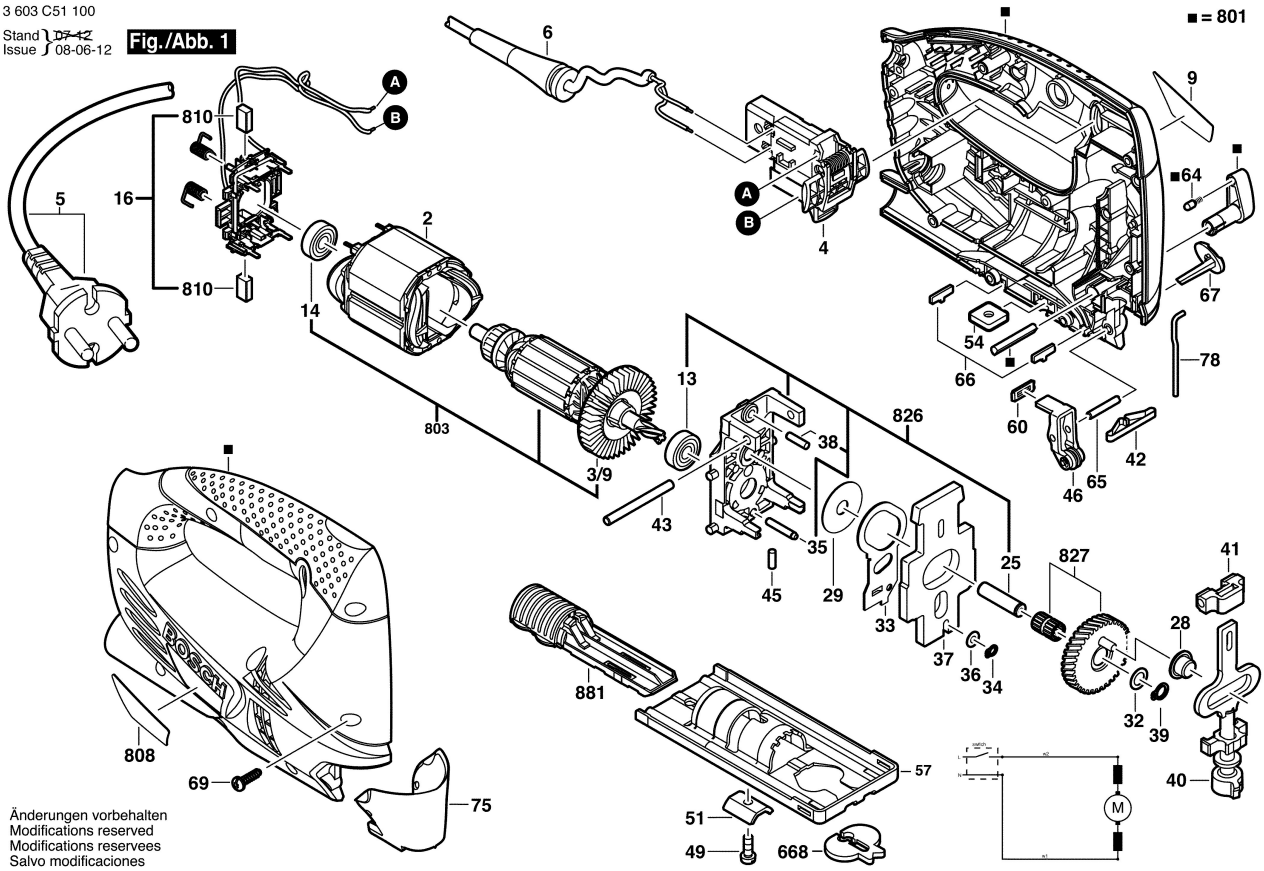

Änderungen vorbehalten
Modifications reserved
Modifications reservees
Salvo modificaciones