3 603 C52 100

Stand ~~08-06~~
Issue 09-08-19

Fig./Abb. 1

■ = 801

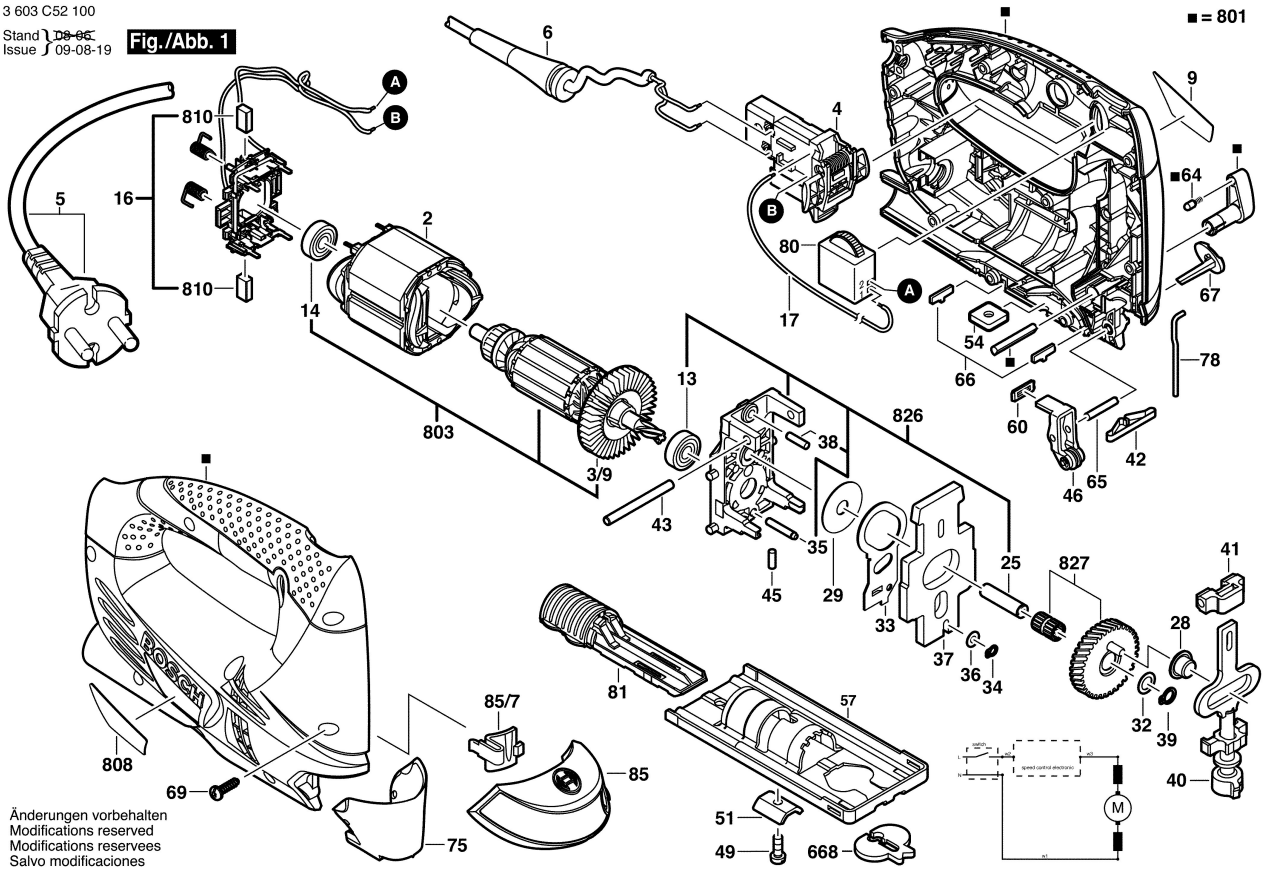

Änderungen vorbehalten
Modifications reserved
Modifications reservees
Salvo modificaciones