3 603 D11 141
Stand / Issue 08-07-31

Fig./Abb. 1

Gerad - Verzahnung

● Vor Demontage des Ankers Kohlebürsten 5mm zurückziehen !

Before the armature is removed the carbon brushes must be withdrawn by at least 5mm !

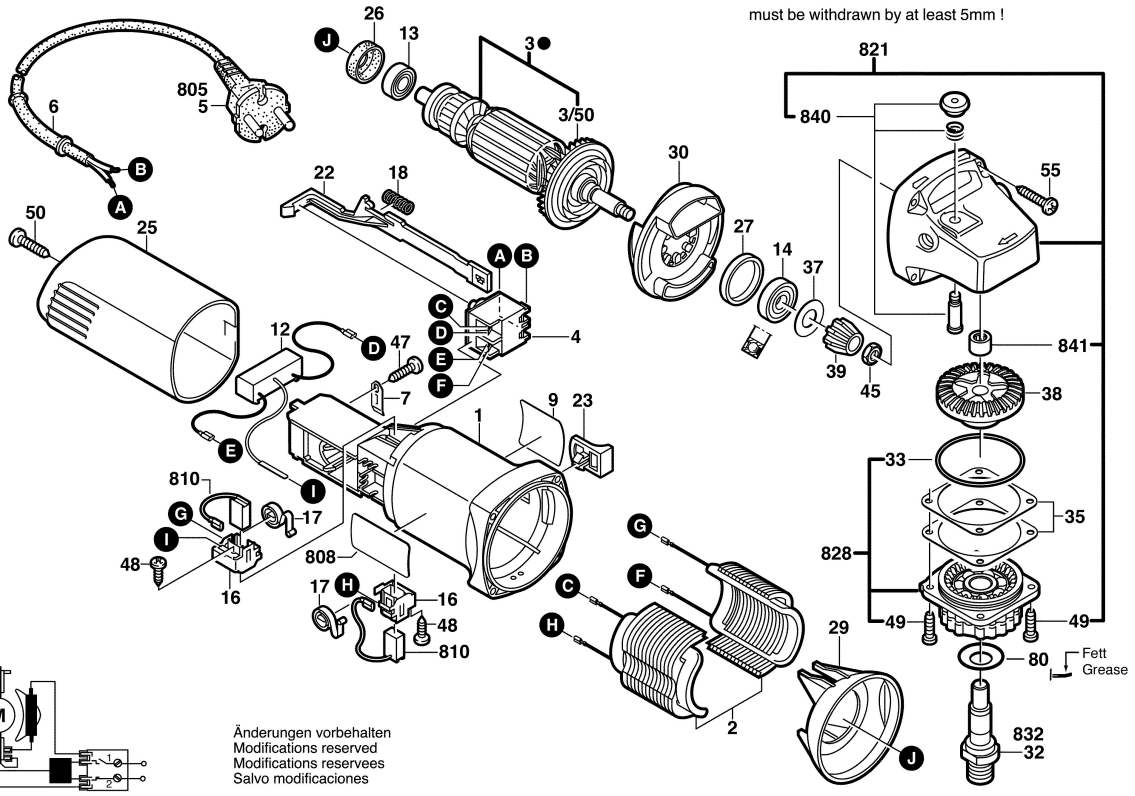

3 603 D11 141
Stand / Issue ~~08-07~~ 09-01-21

Fig./Abb. 2

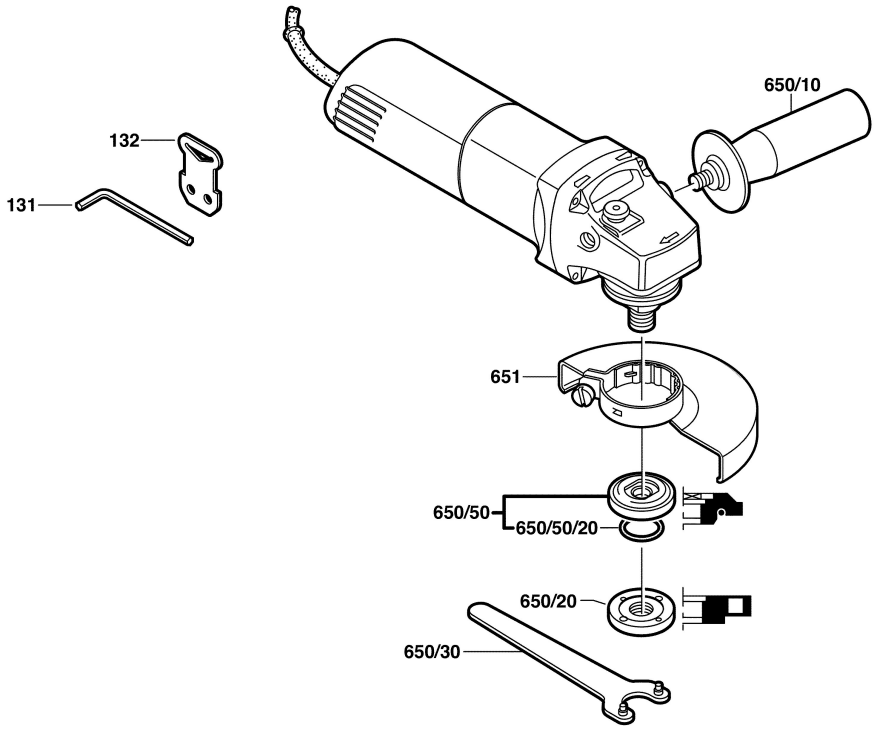

Änderungen vorbehalten
Modifications reserved
Modifications reservees
Salvo modificaciones