3 611 B28 712
Issue Stand } 11-07-25

Fig./Abb. 1

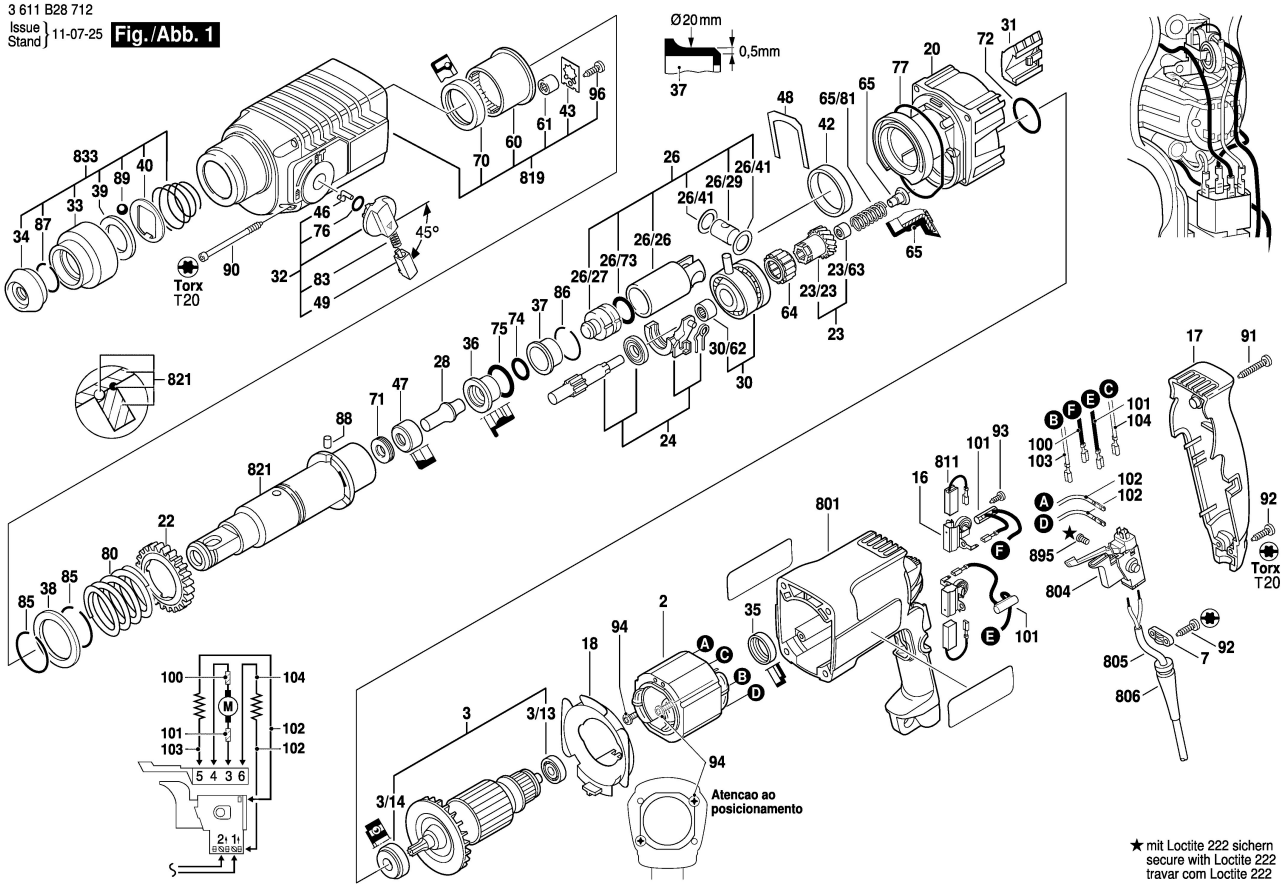

★ mit Loctite 222 sichern
secure with Loctite 222
travar com Loctite 222