3 611 C0A 010

Issue / Stand 14-07-04
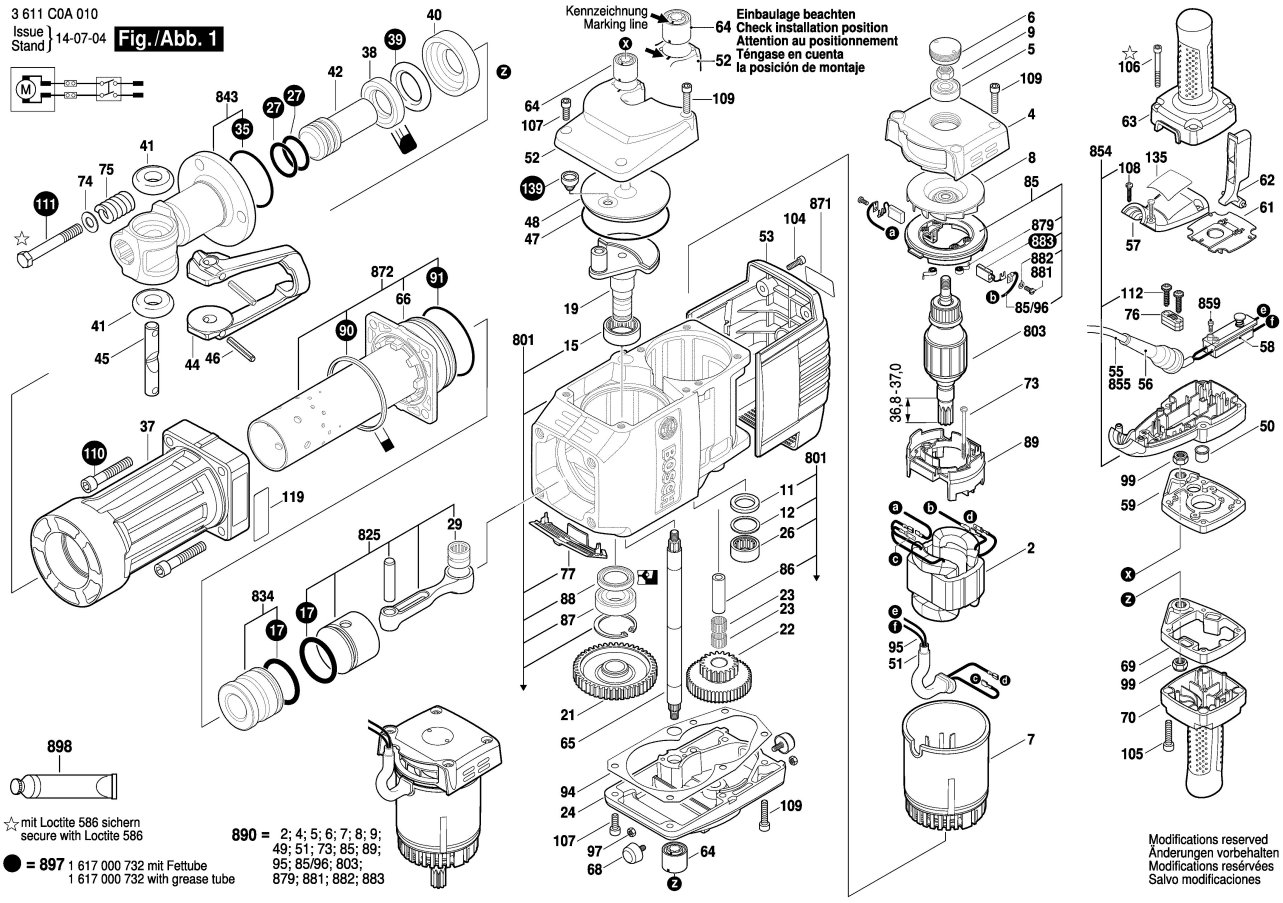
Fig./Abb. 1