3 611 C36 S00
Issue / Stand } 14-09-23 **Fig./Abb. 1**

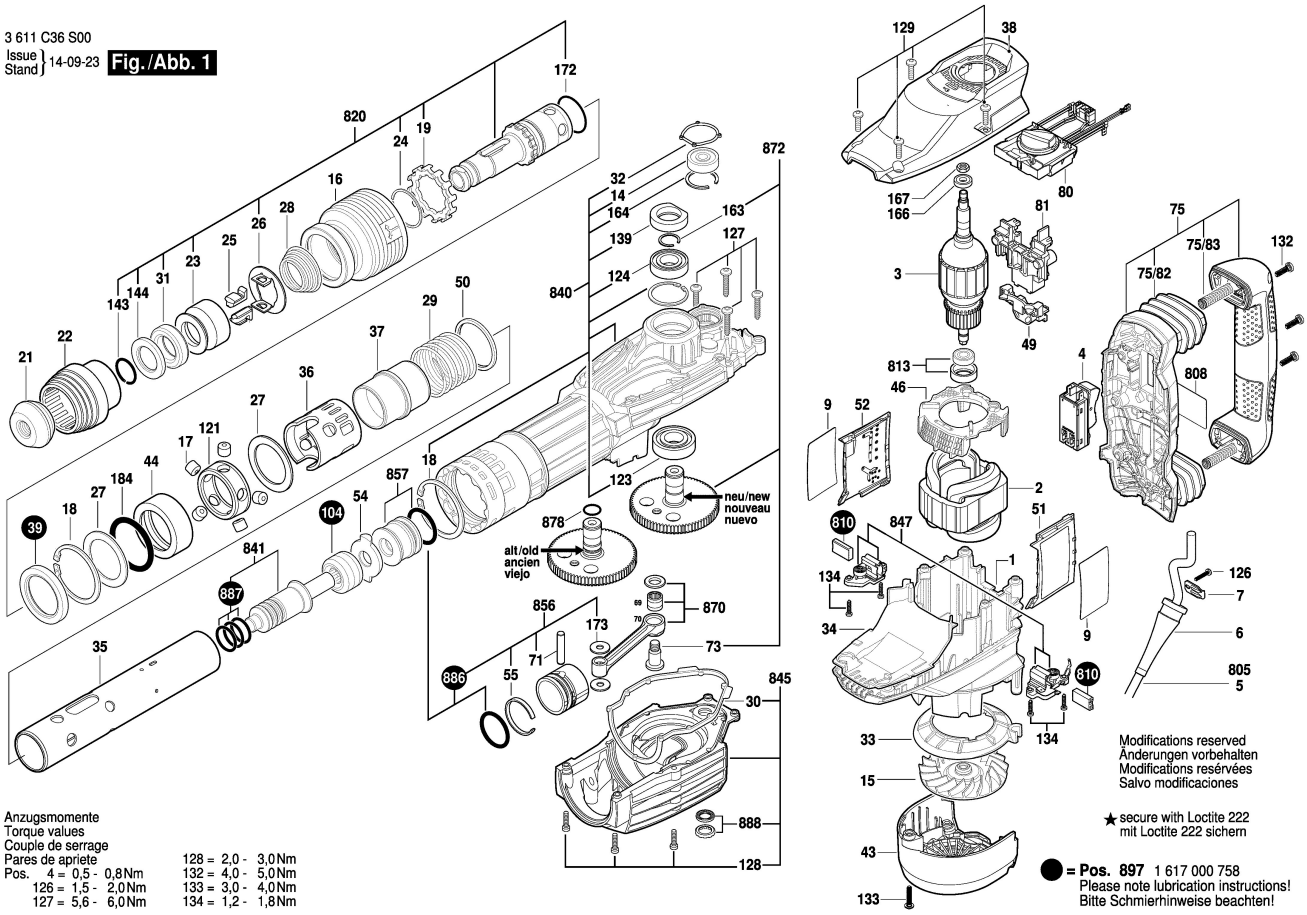


Anzugsmomente
Torque values
Couple de serrage
Pares de apriete

| | | | |
|---|---|---|---|
| Pos. 4 = | 0,5 - 0,8 Nm | 128 = | 2,0 - 3,0 Nm |
| 126 = | 1,5 - 2,0 Nm | 132 = | 4,0 - 5,0 Nm |
| 127 = | 5,6 - 6,0 Nm | 133 = | 3,0 - 4,0 Nm |
| | | 134 = | 1,2 - 1,8 Nm |

3 611 C36 S00
Issue / Stand } 14-09-23 **Fig./Abb. 2**

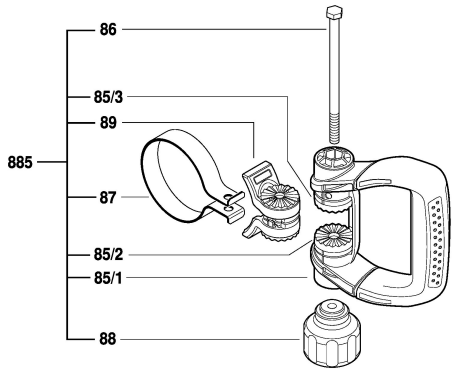


Modifications reserved
Änderungen vorbehalten
Modifications resérvées
Salvo modificaciones