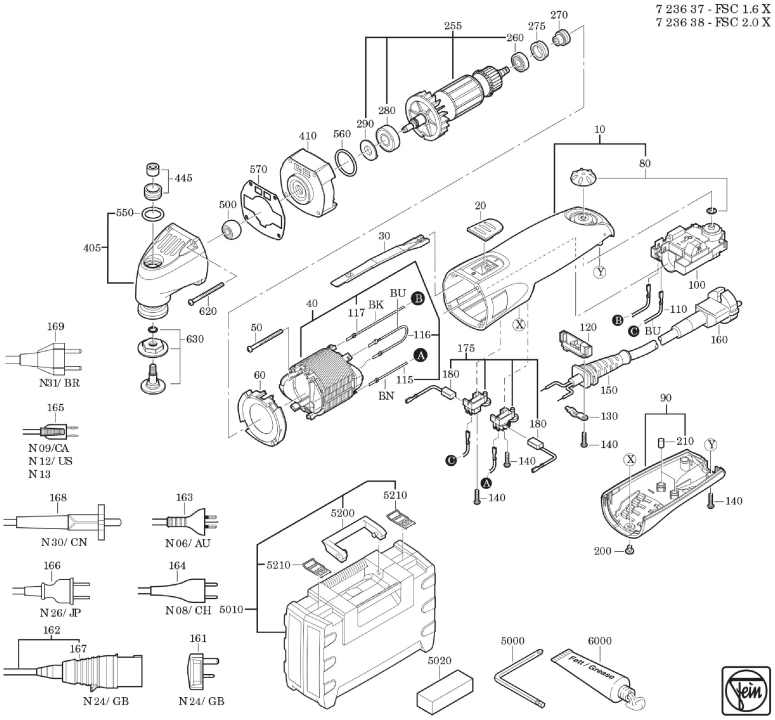Type: FSC 1.6 X (50/60Hz, 220/230V)
Part no.: 72363708230