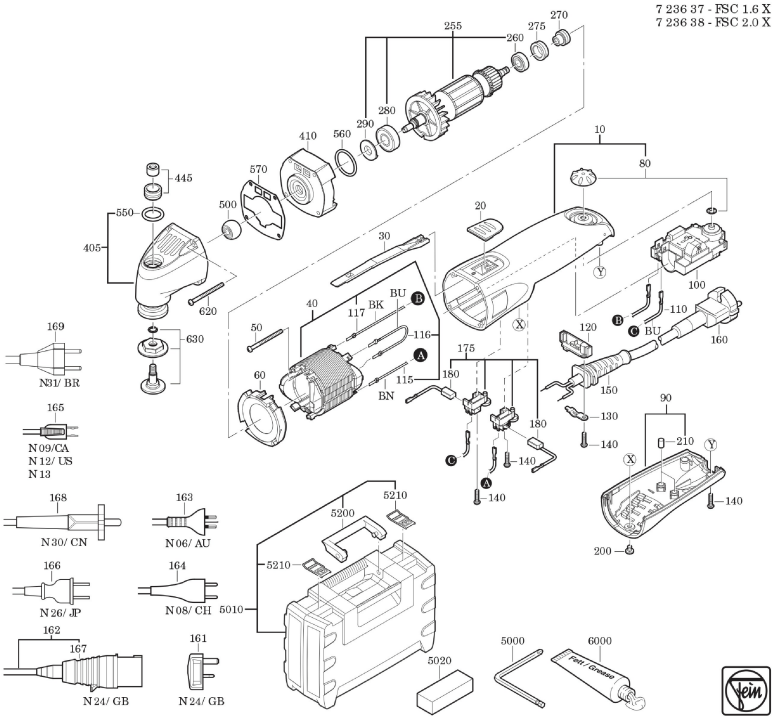Type: FSC 2.0 X (50/60Hz, 220/230V)
Part no.: 72363808230