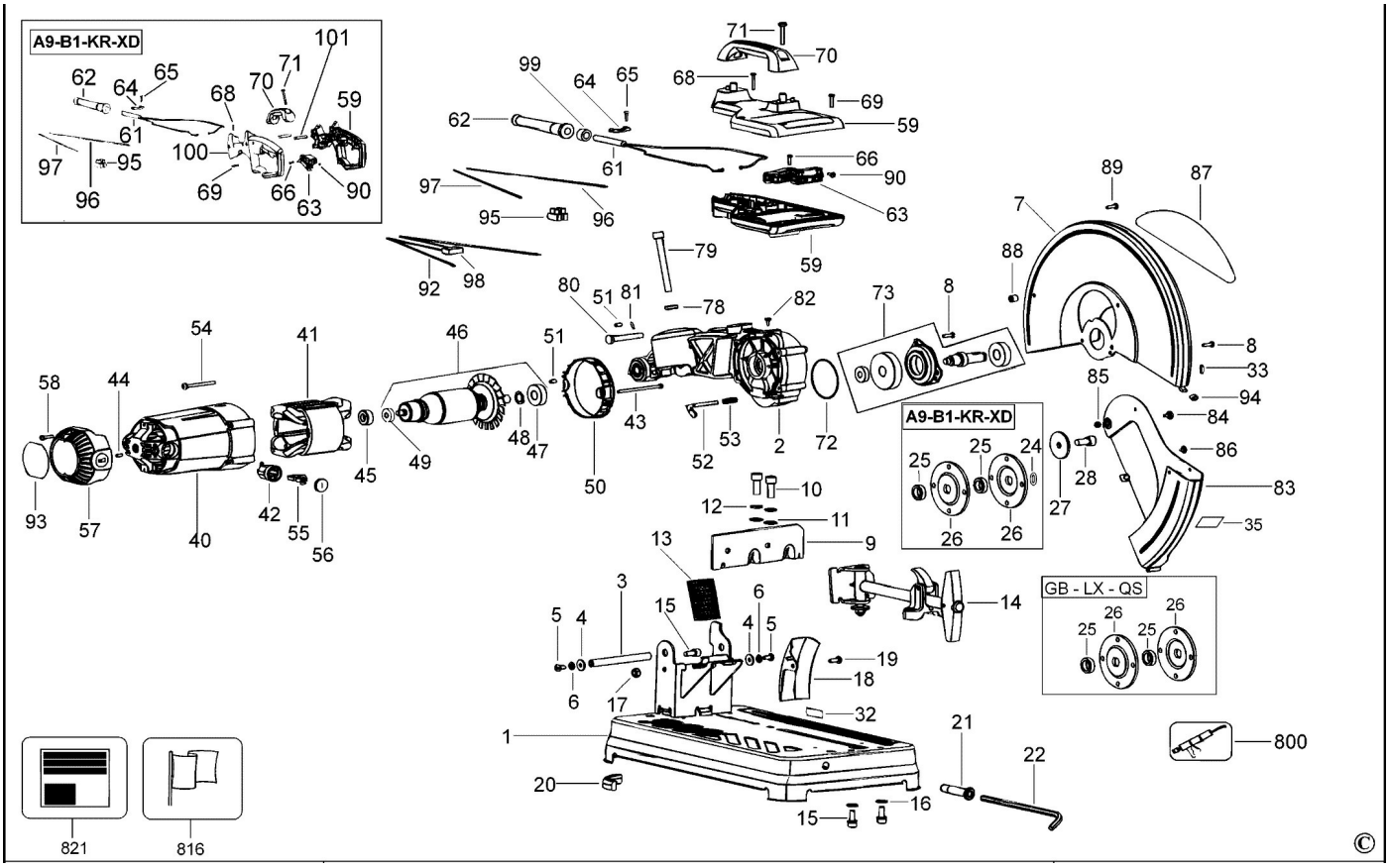
A9-B1-KR-XD
A9-B1-KR-XD
GB - LX - QS
©