F012 184 544
Issue / Stand } 02-03-28
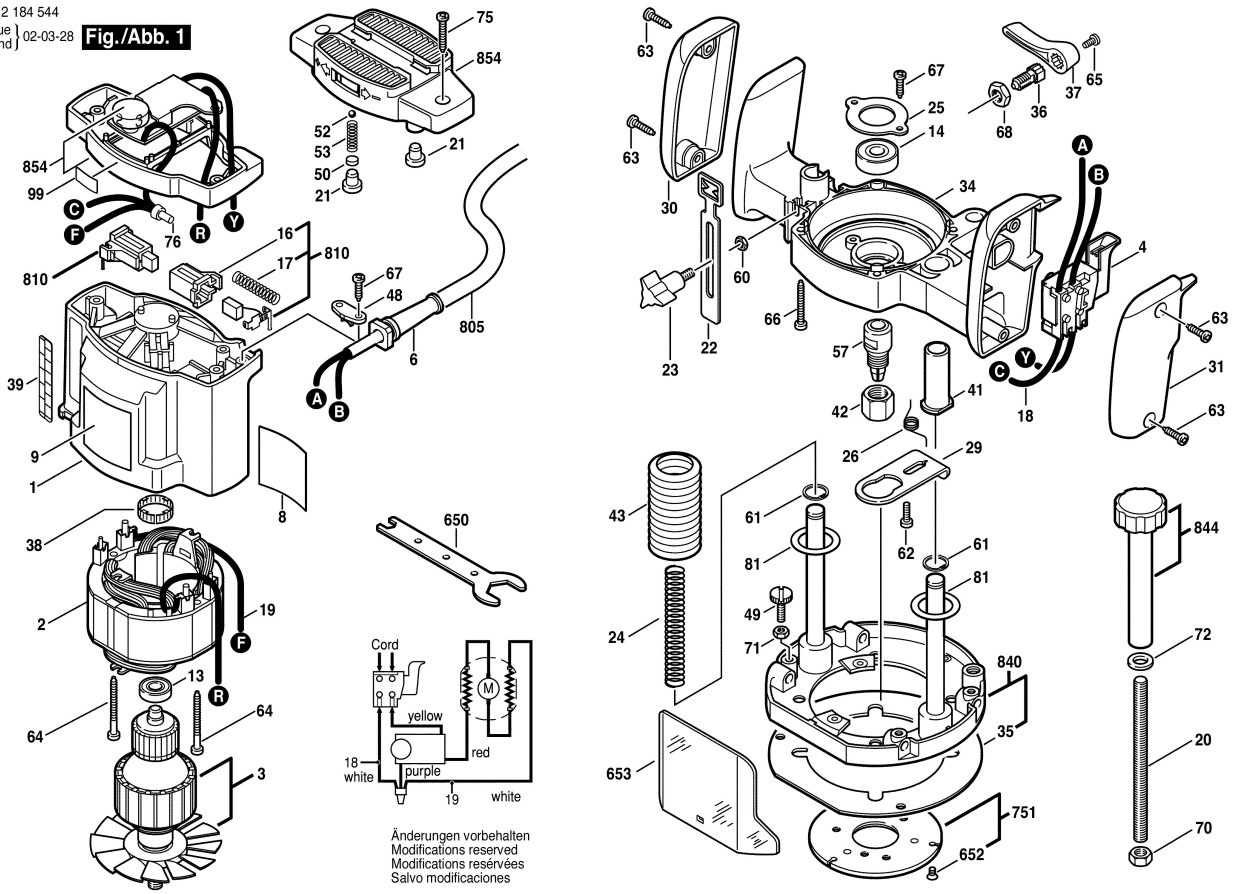
Fig./Abb. 1