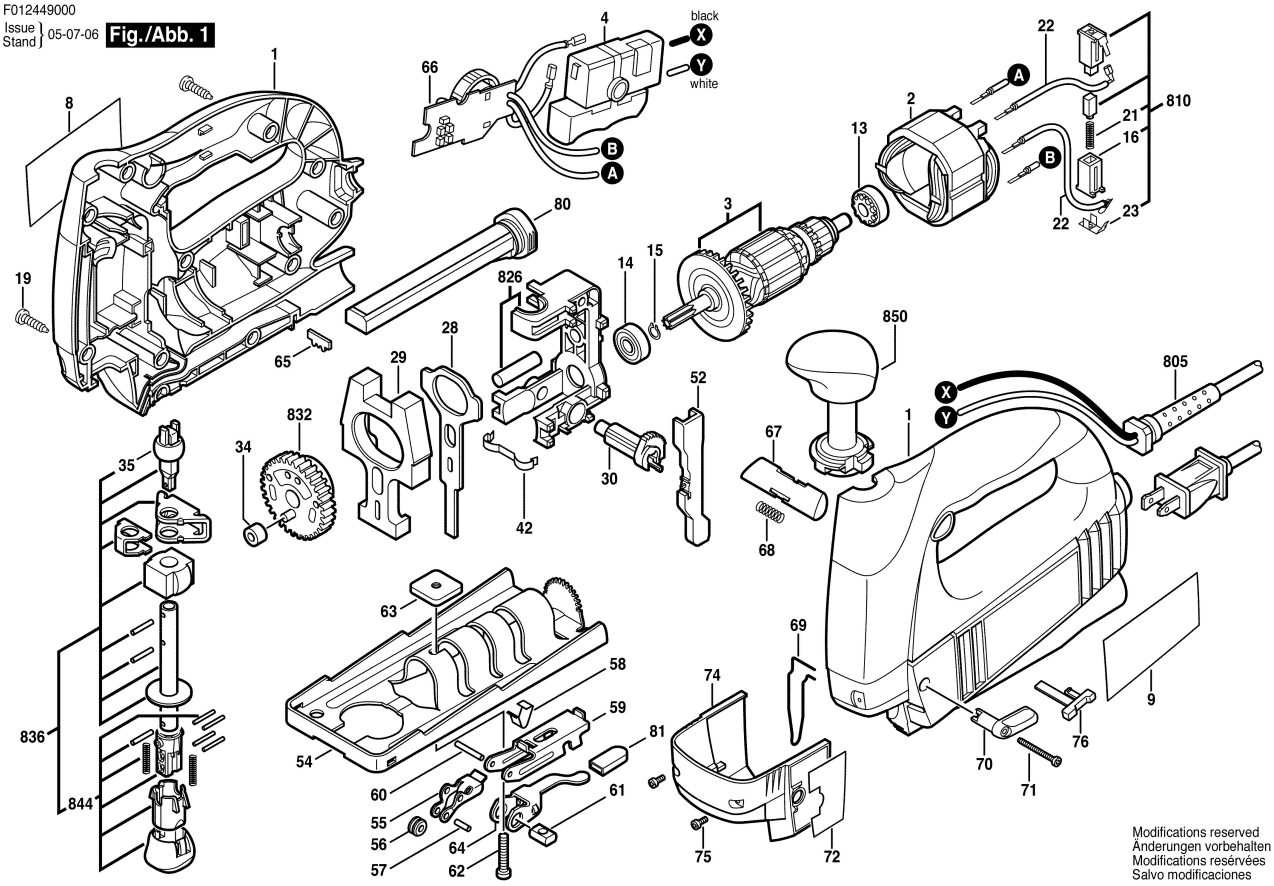F012449000
Issue Stand } 05-07-06 **Fig./Abb. 1**