F012 517 500
Issue
Stand } 00-11-07 **Fig./Abb. 1**

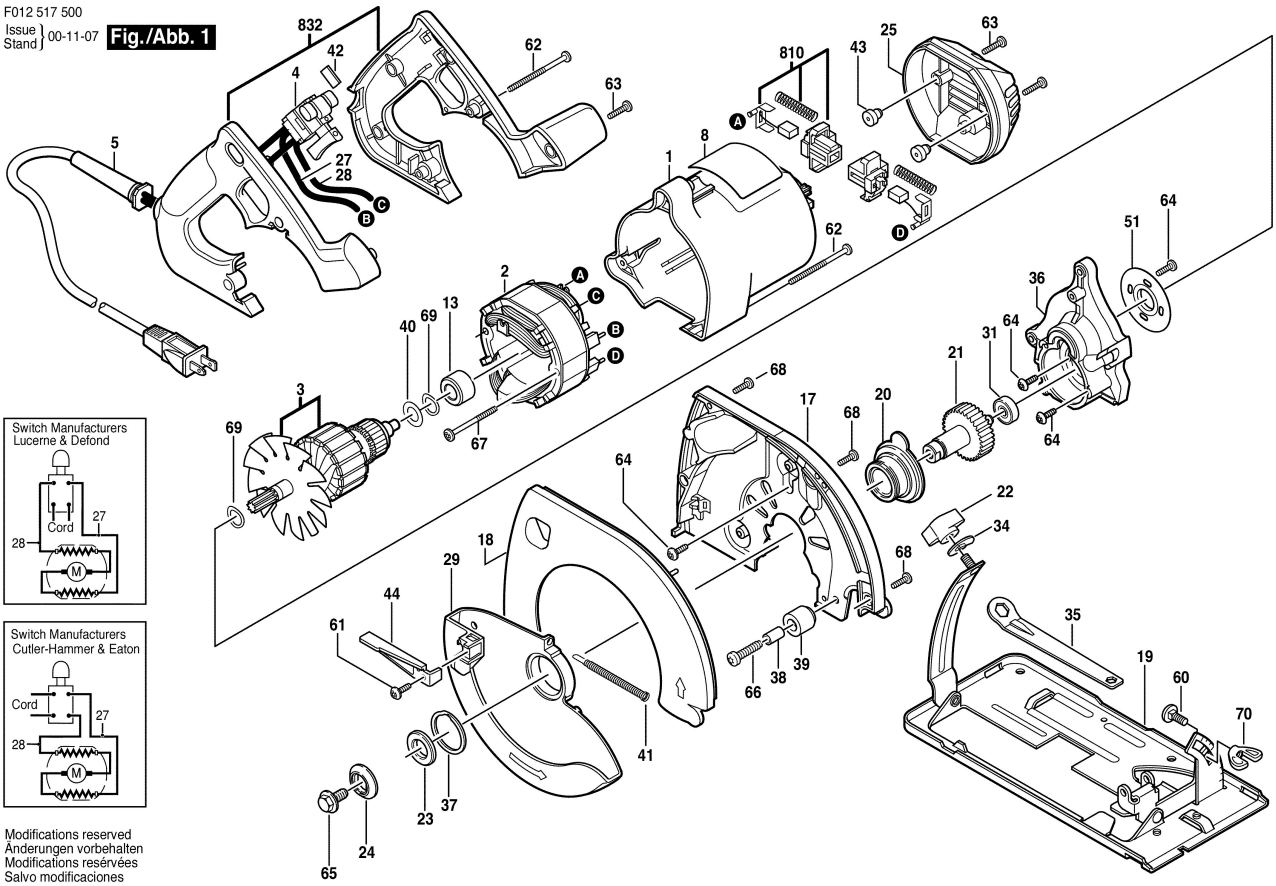

Switch Manufacturers
Lucerne & Defond

Switch Manufacturers
Cutler-Hammer & Eaton

Modifications reserved
Änderungen vorbehalten
Modifications reservées
Salvo modificaciones