F012 527 501

Issue / Stand } 00-11-10

**Fig./Abb. 1**

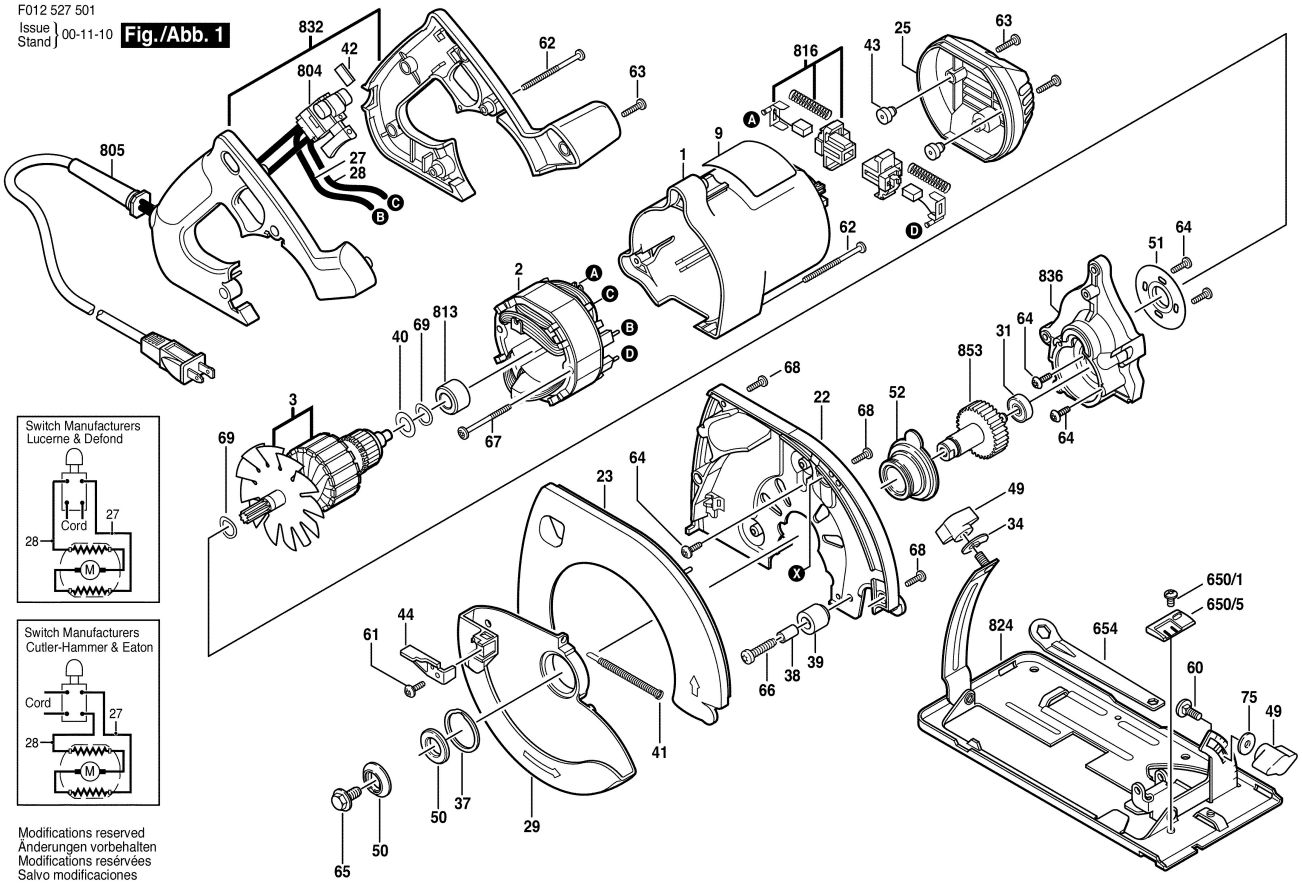


Switch Manufacturers
Lucerne & Defond




Switch Manufacturers
Cutler-Hammer & Eaton




Modifications reserved
Änderungen vorbehalten
Modifications reservées
Salvo modificaciones