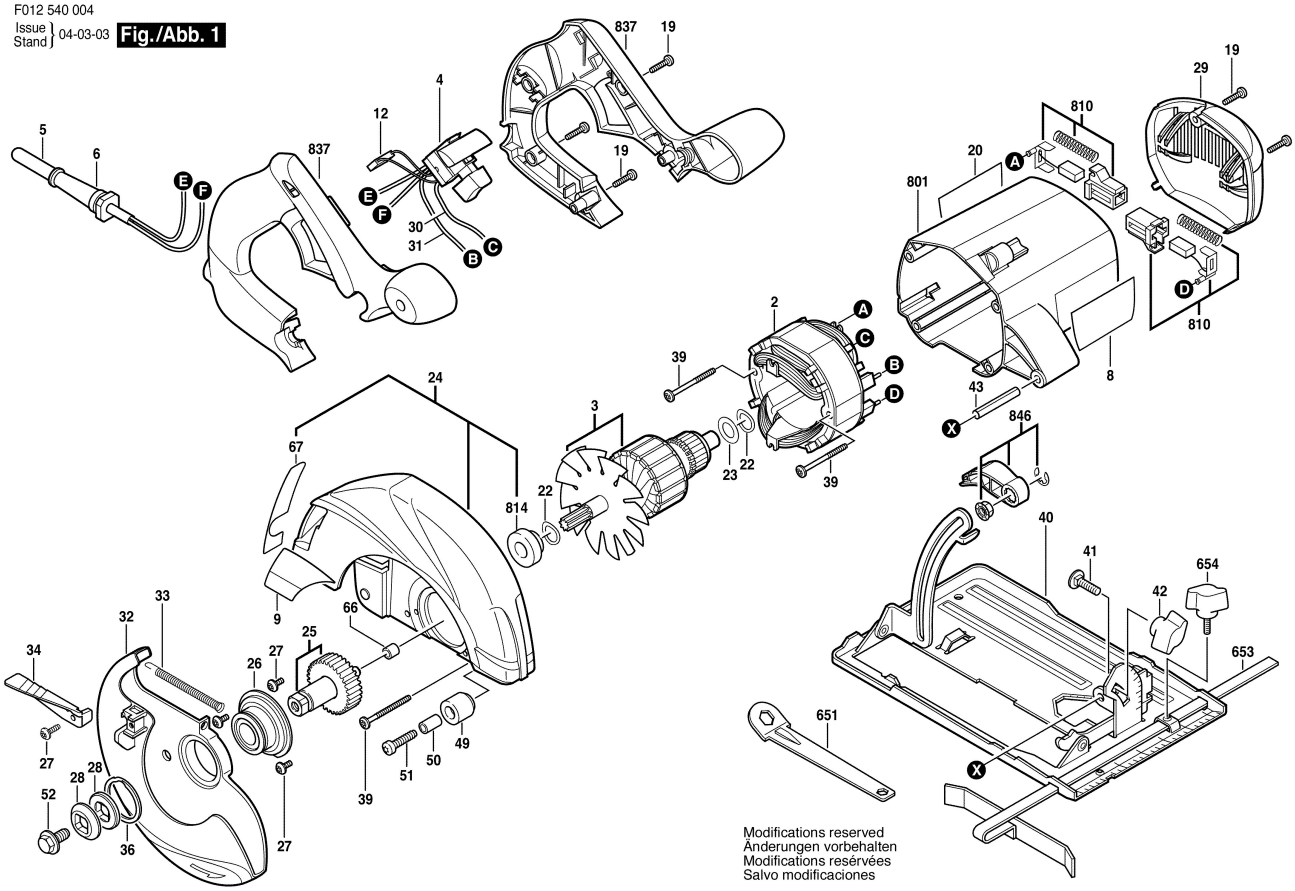F012 540 004
Issue Stand } 04-03-03 **Fig./Abb. 1**