F012 566 03M

Stand ~~98-08~~
Issue 99-01-22
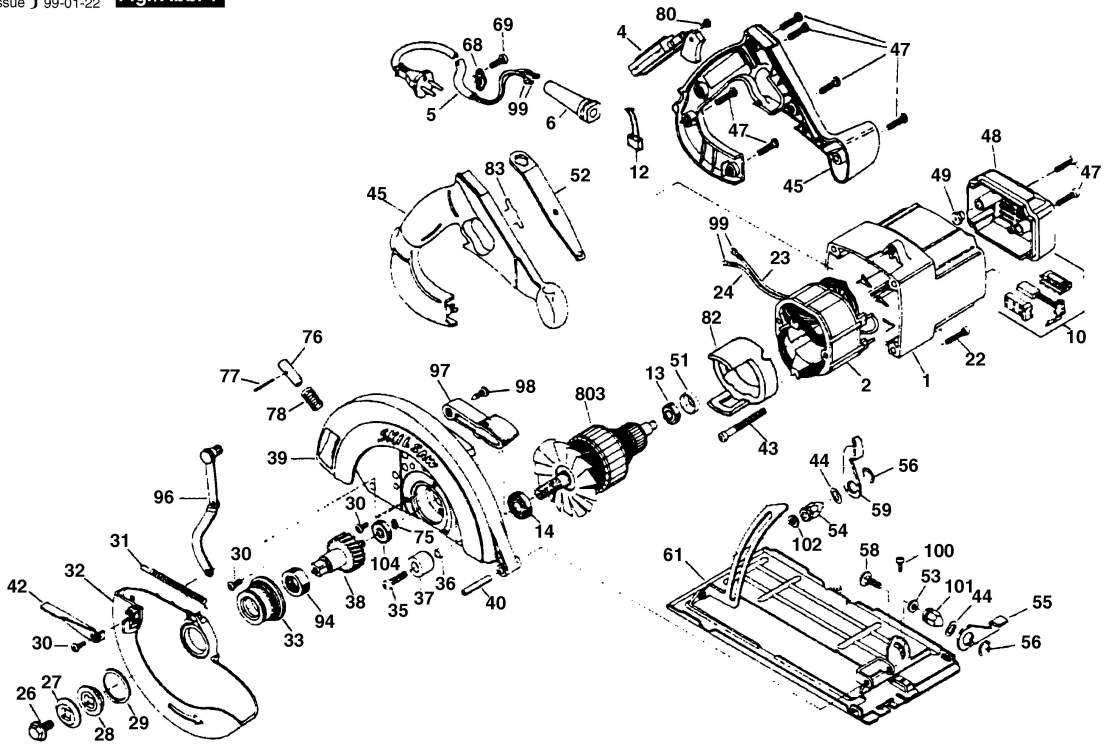
Fig./Abb. 1