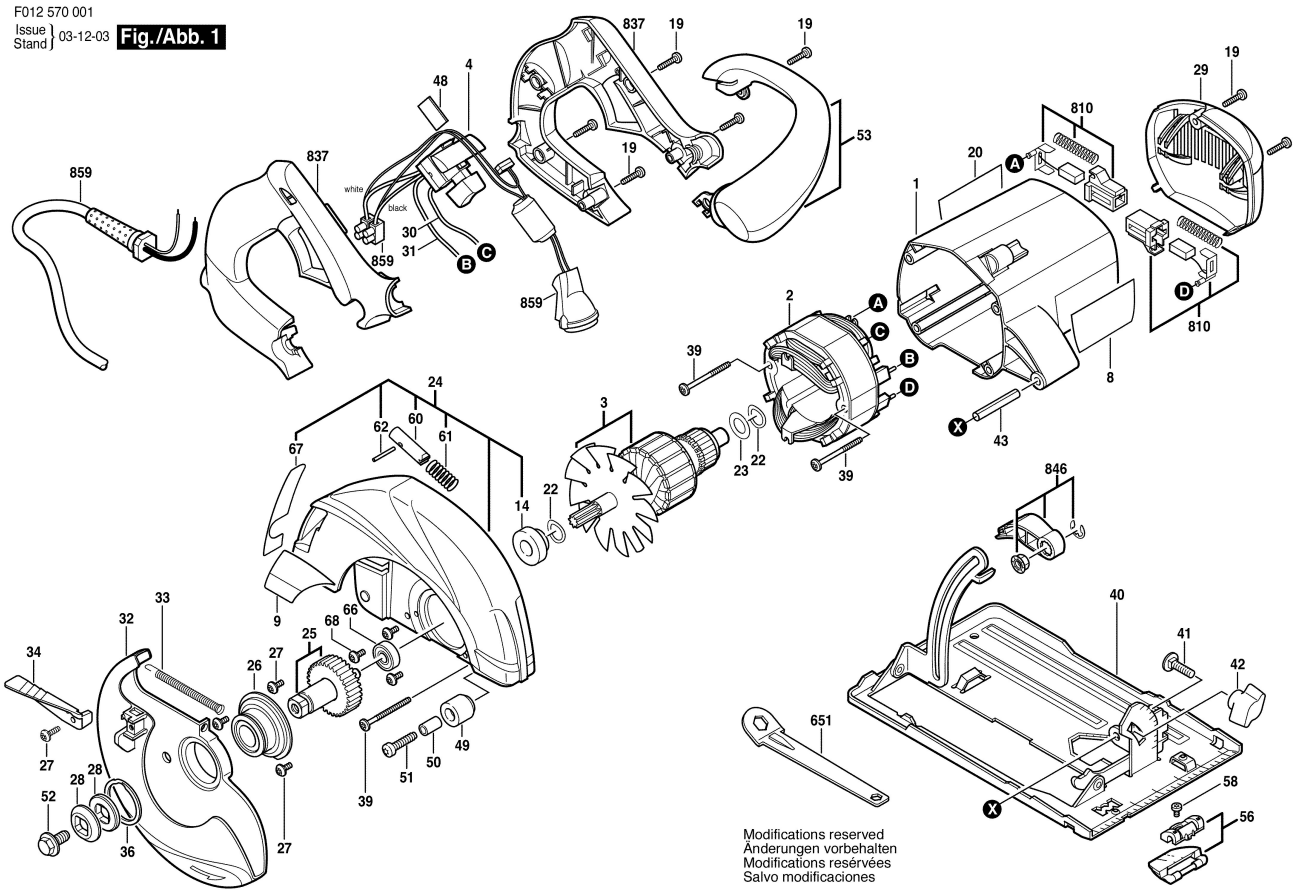F012 570 001
Issue Stand } 03-12-03 **Fig./Abb. 1**