F 013 030 000
Stand / Issue } 05-04-14
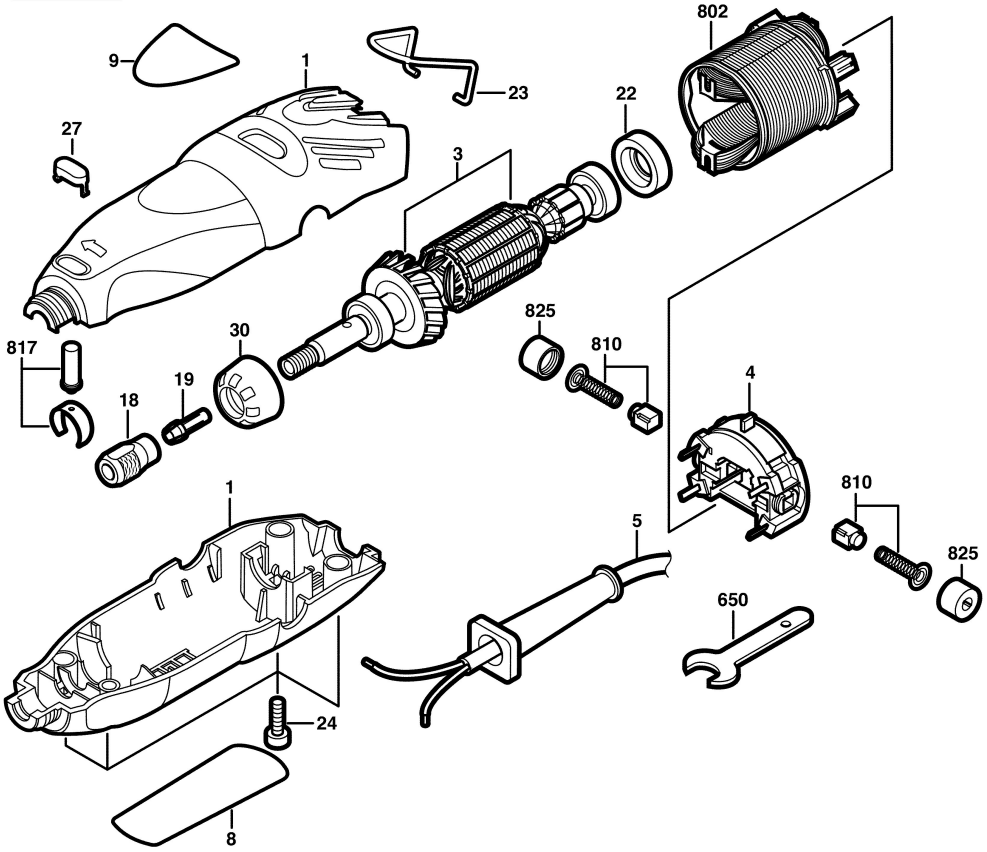
Fig./Abb. 1