F013 0732 00
Stand ~~98-07-09~~
Issue 98-08-26
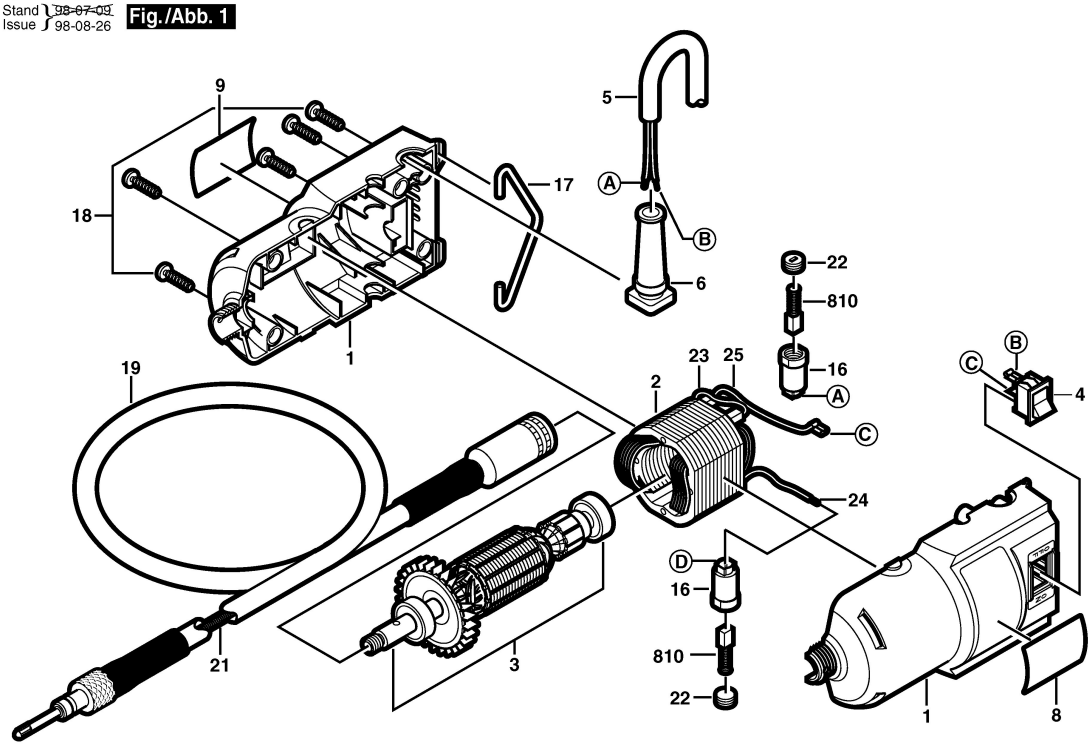
**Fig./Abb. 1**