F 015 180 0E1
Stand ~~09-05~~
Issue 05-11-14
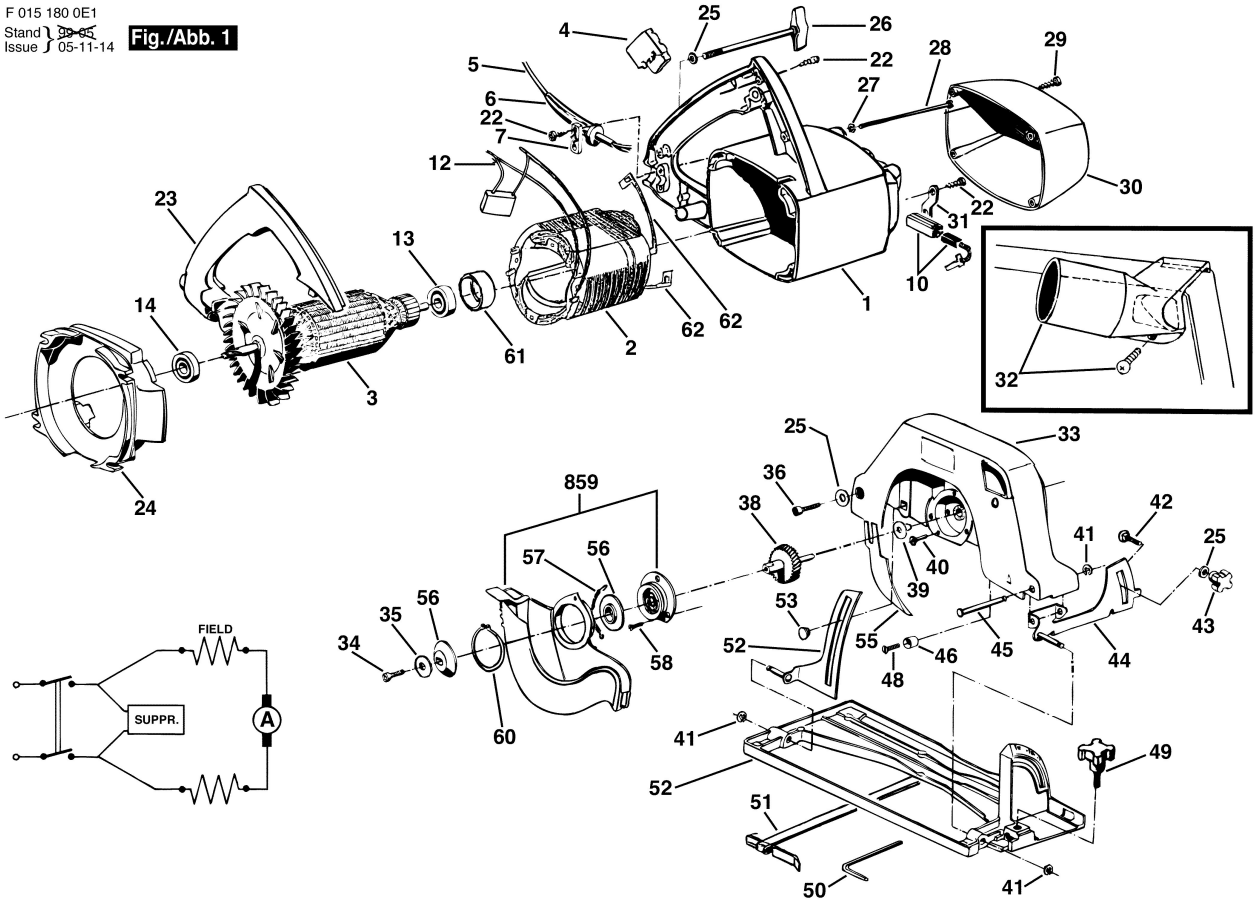
Fig./Abb. 1