F 015 646 0H1

Stand ~~98-11~~
Issue 00-01-24

Fig./Abb. 1

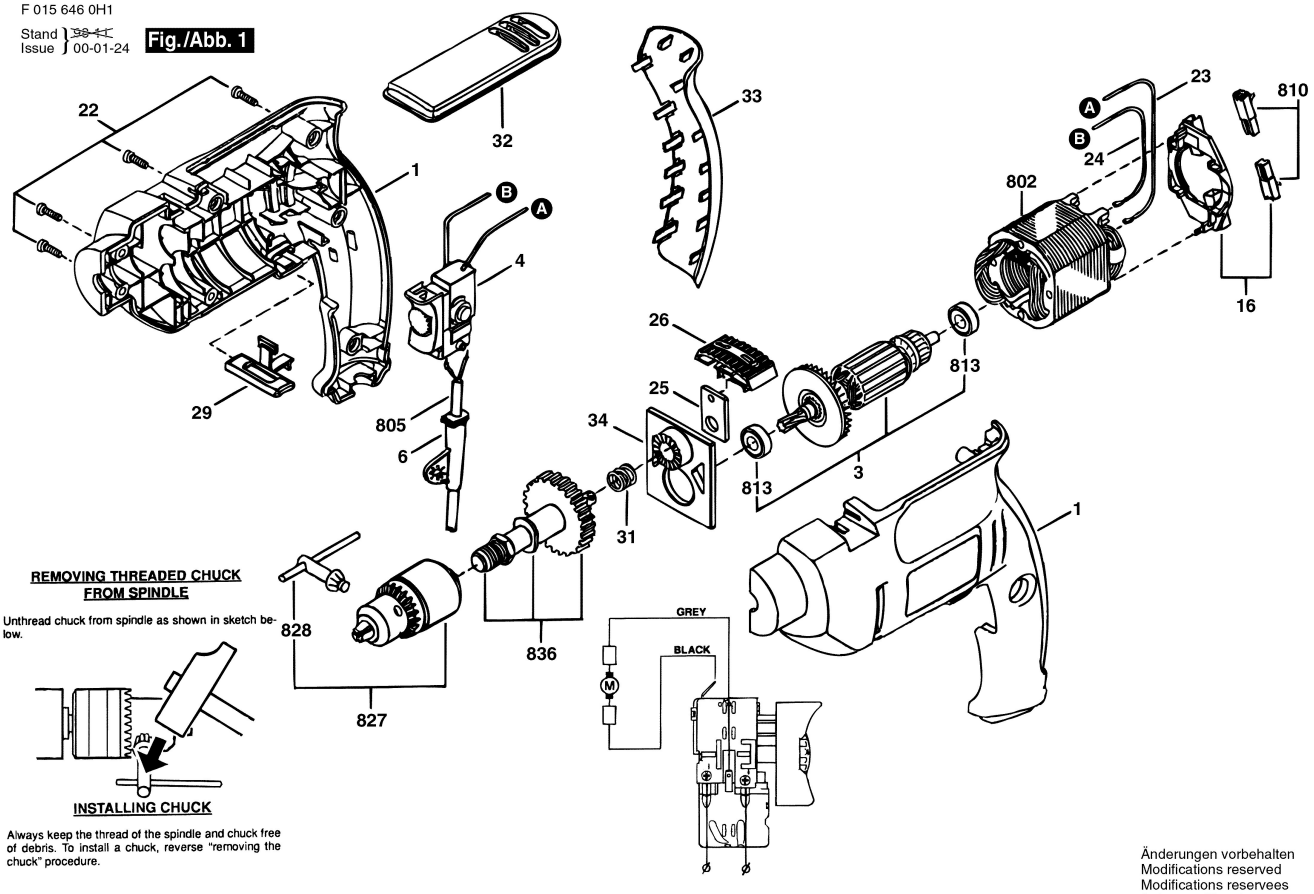

REMOVING THREADED CHUCK FROM SPINDLE

Unthread chuck from spindle as shown in sketch below.

INSTALLING CHUCK

Always keep the thread of the spindle and chuck free of debris. To install a chuck, reverse "removing the chuck" procedure.

WIRING DIAGRAM

Änderungen vorbehalten
Modifications reserved
Modifications reservees
Salvo modificaciones