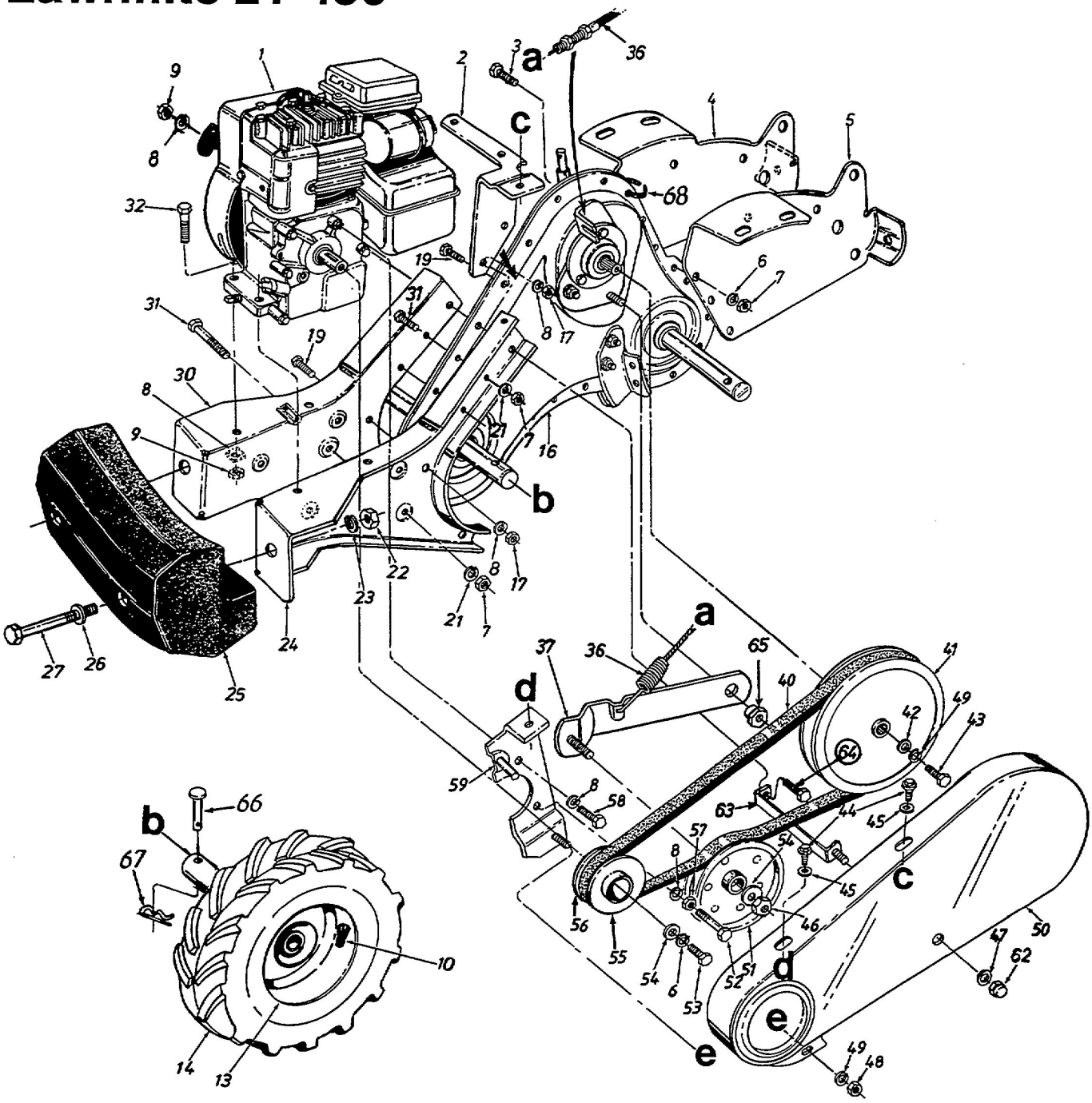Lawnflite 21-430