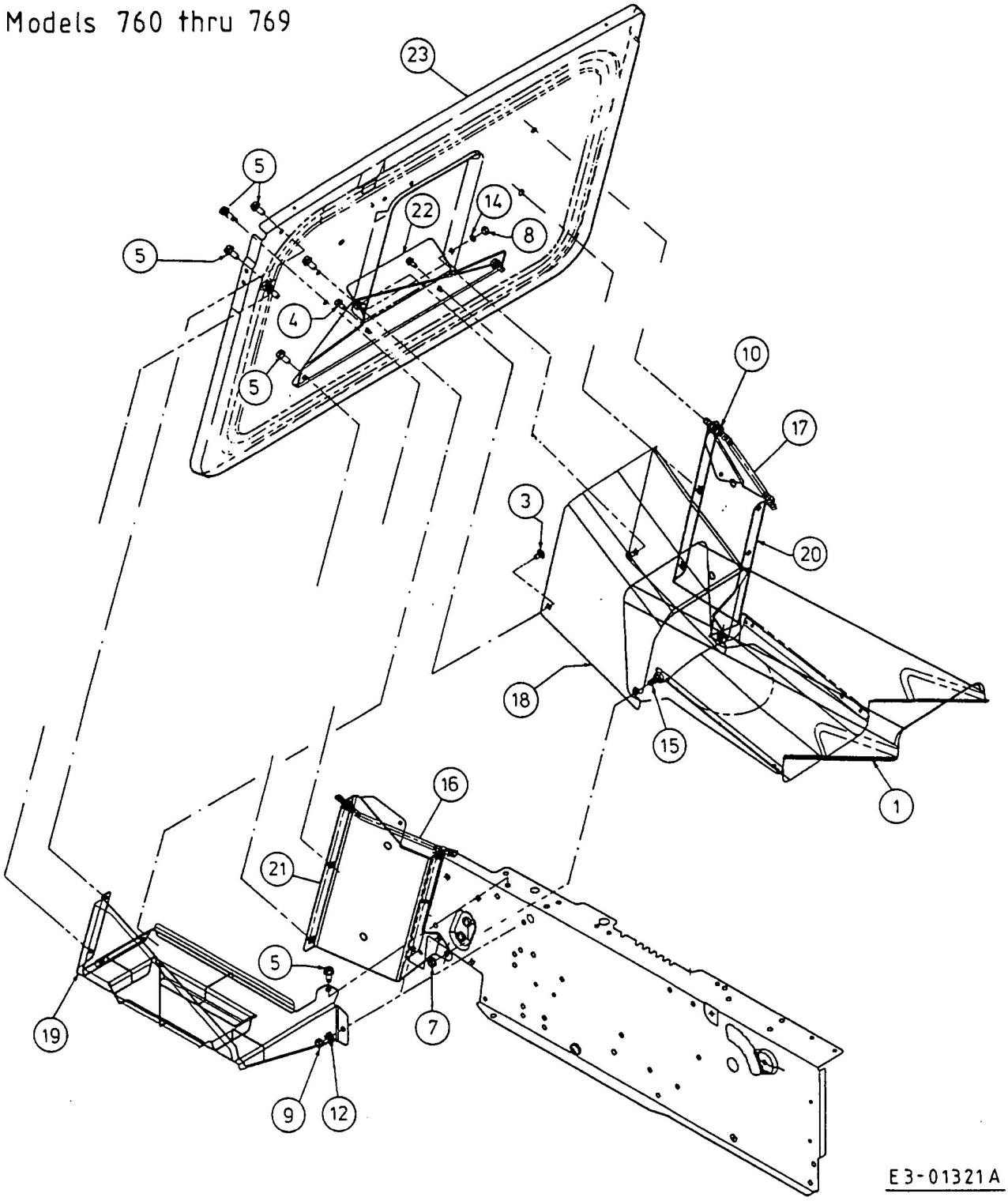Models 760 thru 769