MH 534 RVE

A1992-3306-01

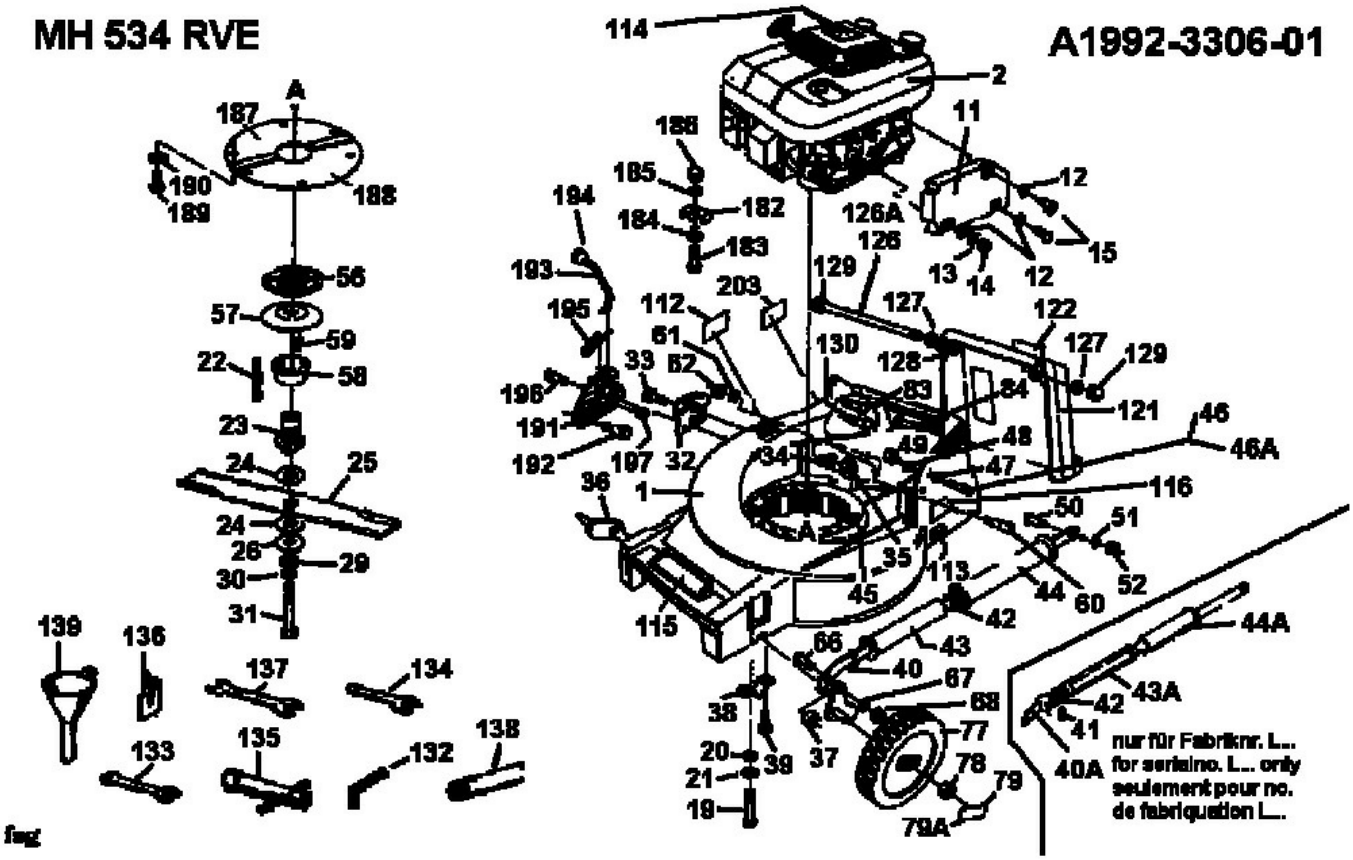

fsg