VE 30	16AE11CA600
VE 30 HANSEATIC	16AE11CA621
VE 30 F	16AF11CA621
VE 30 CMI	16AE11CA620
VE 30 CH	16AE11CA664
VE 30 COOP	16AE11CA666
VE 30 B	16AF11CA600
OK V 30	16AE11CA667
OK VE 30 B	16AF11CA667
30 VEP GOLF	16AF11CA636

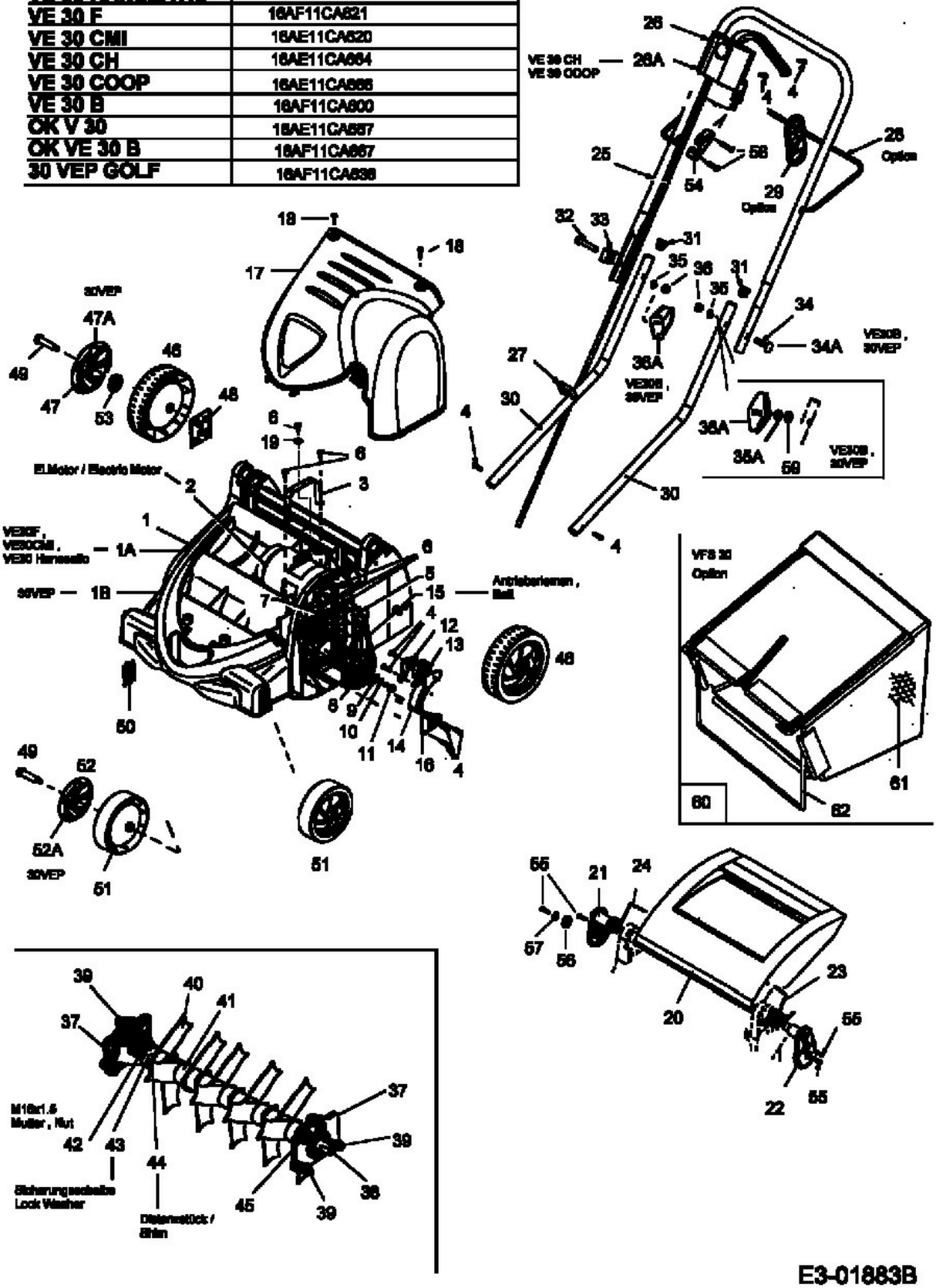

E3-01883B