SP 53 GHW

12A-568R678

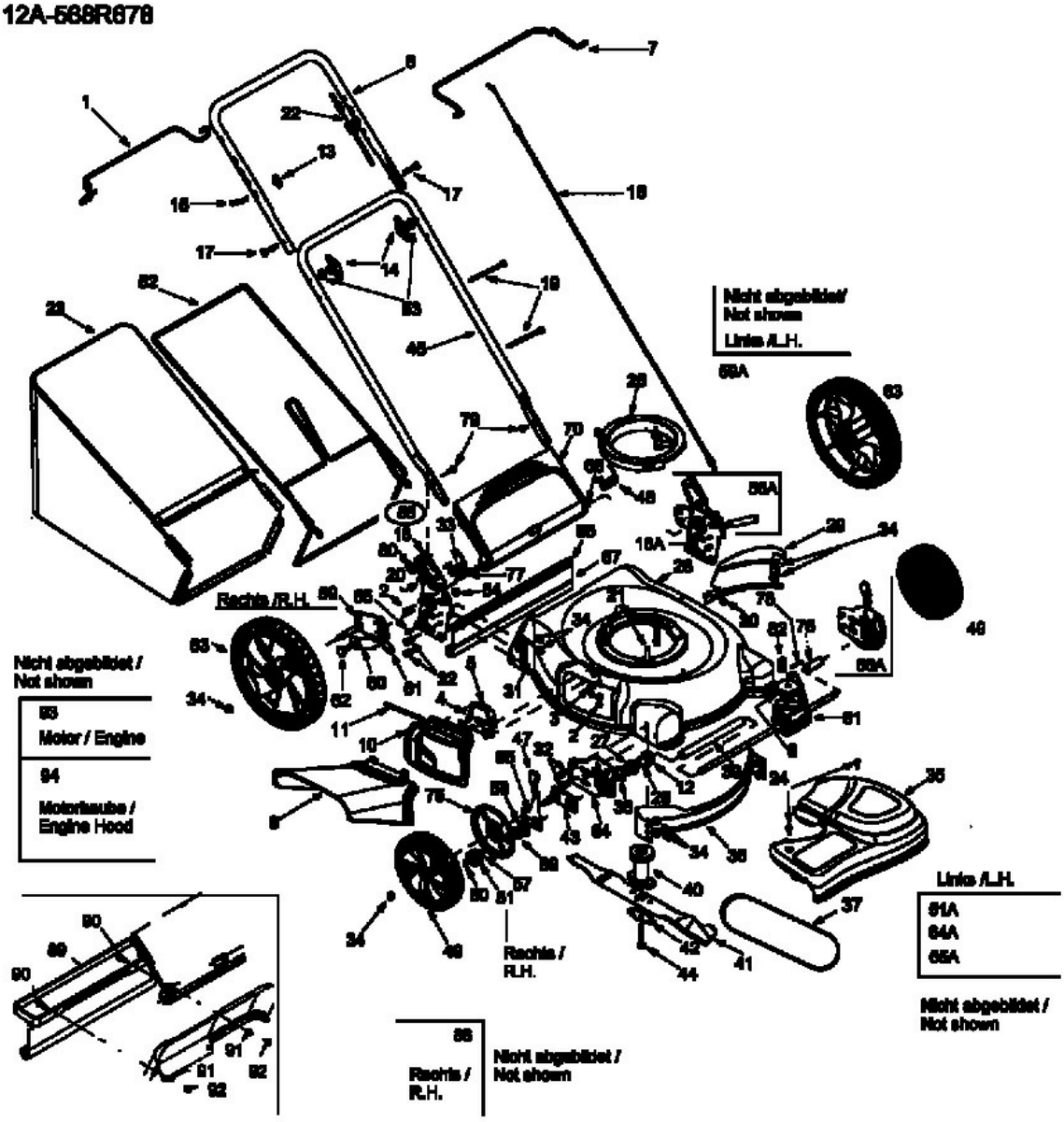

E3-01934A