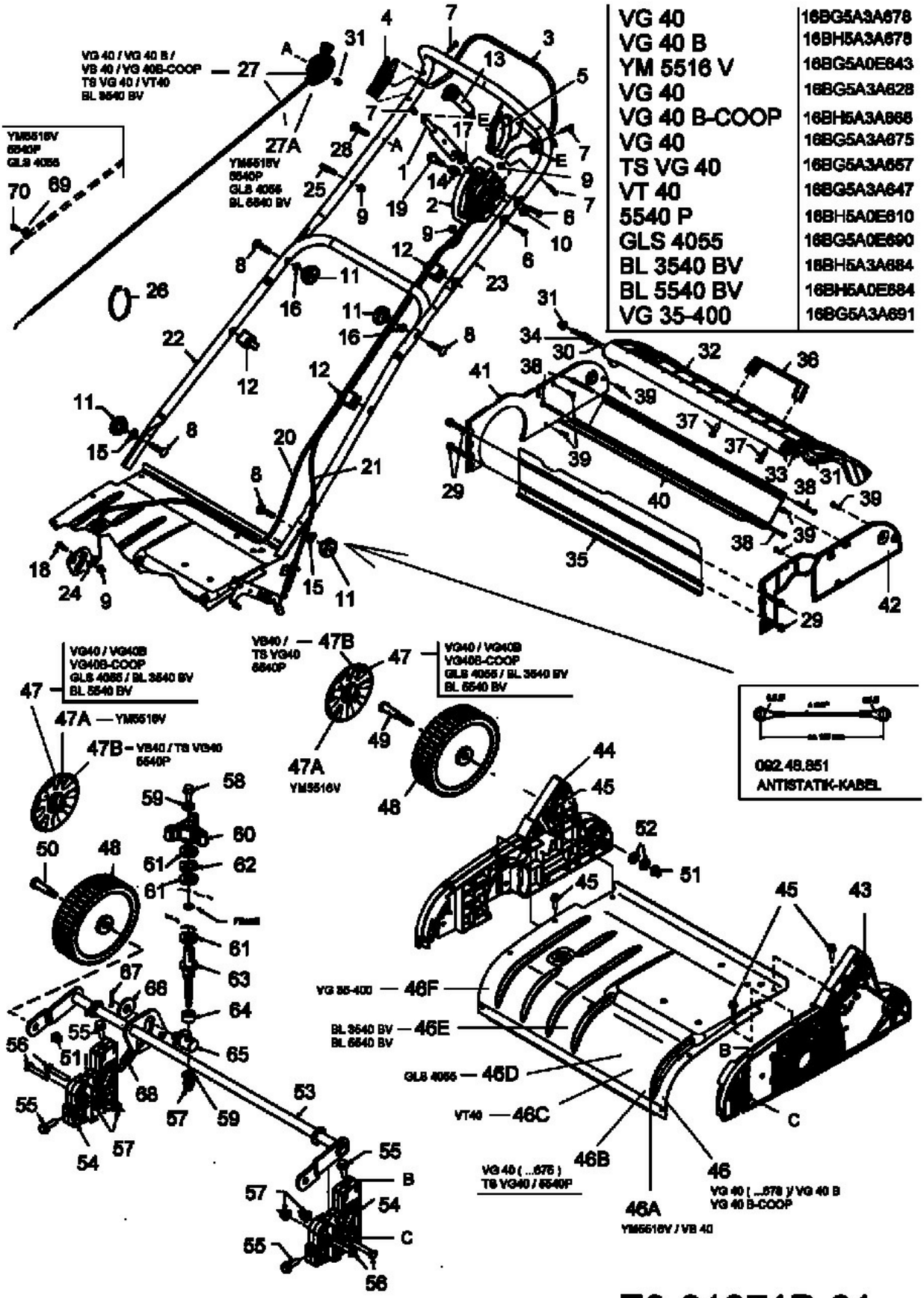

VG 40	16BG5A3A678
VG 40 B	16BH5A3A678
YM 5516 V	16BG5A0E843
VG 40	16BG5A3A628
VG 40 B-COOP	16BH5A3A668
VG 40	16BG5A3A675
TS VG 40	16BG5A3A657
VT 40	16BG5A3A647
5540 P	16BH5A0E610
GLS 4055	16BG5A0E690
BL 3540 BV	16BH5A3A684
BL 5540 BV	16BH5A0E684
VG 35-400	16BG5A3A691

E3-01971B-01