M 380 M T/380 M T/380 M MX MH 81-55R BL 5081 GT	21C-38MT605 21C-38MT678 21C-38MT659 21C-38MT667 21C-385D684

T/380 T/380 T/380 B TBT 380 MX MH 81-50R BL 5081 GT	21C-382A678 , 21B-382A678 21B-383A602 , 21B-382A604 21C-382A602 , 21C-383A602 21B-382A609 21B-382A667 21B-385D684 ,21B-385A684

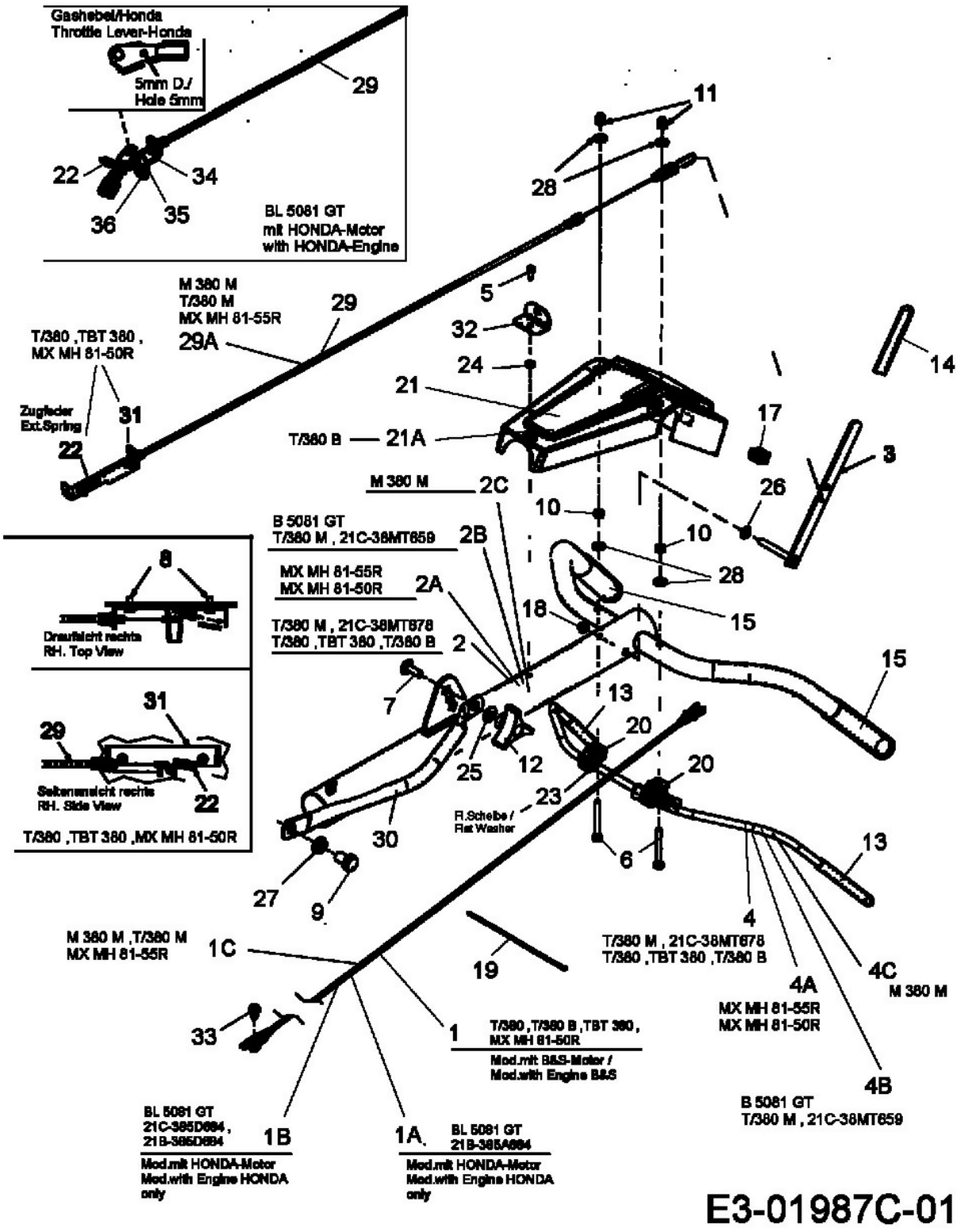

E3-01987C-01