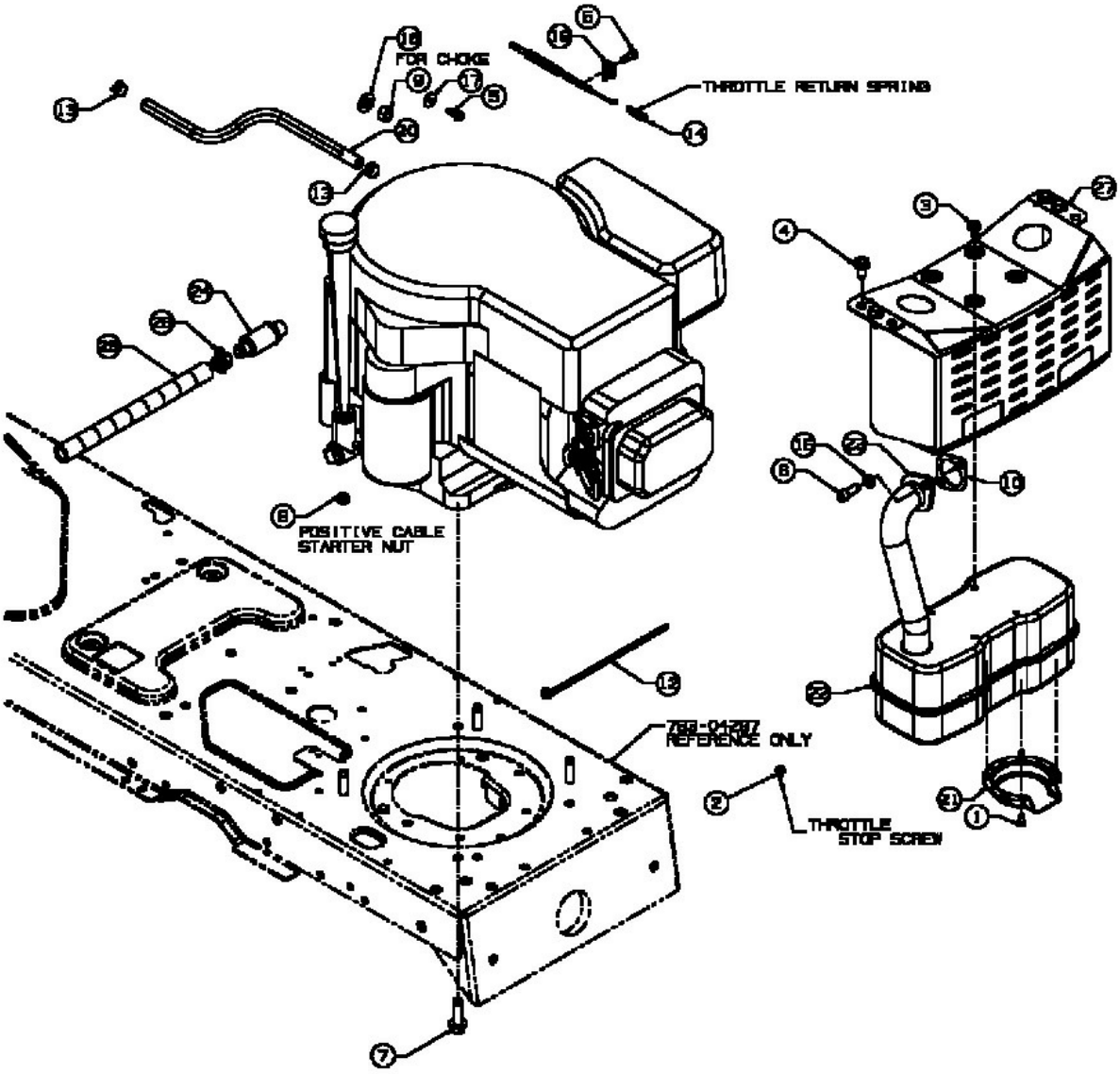
FOR CHOKE
THROTTLE RETURN SPRING
POSITIVE CABLE
STARTER NUT
768-01287
REFERENCE ONLY
THROTTLE
STOP SCREW

E3-02004A-01