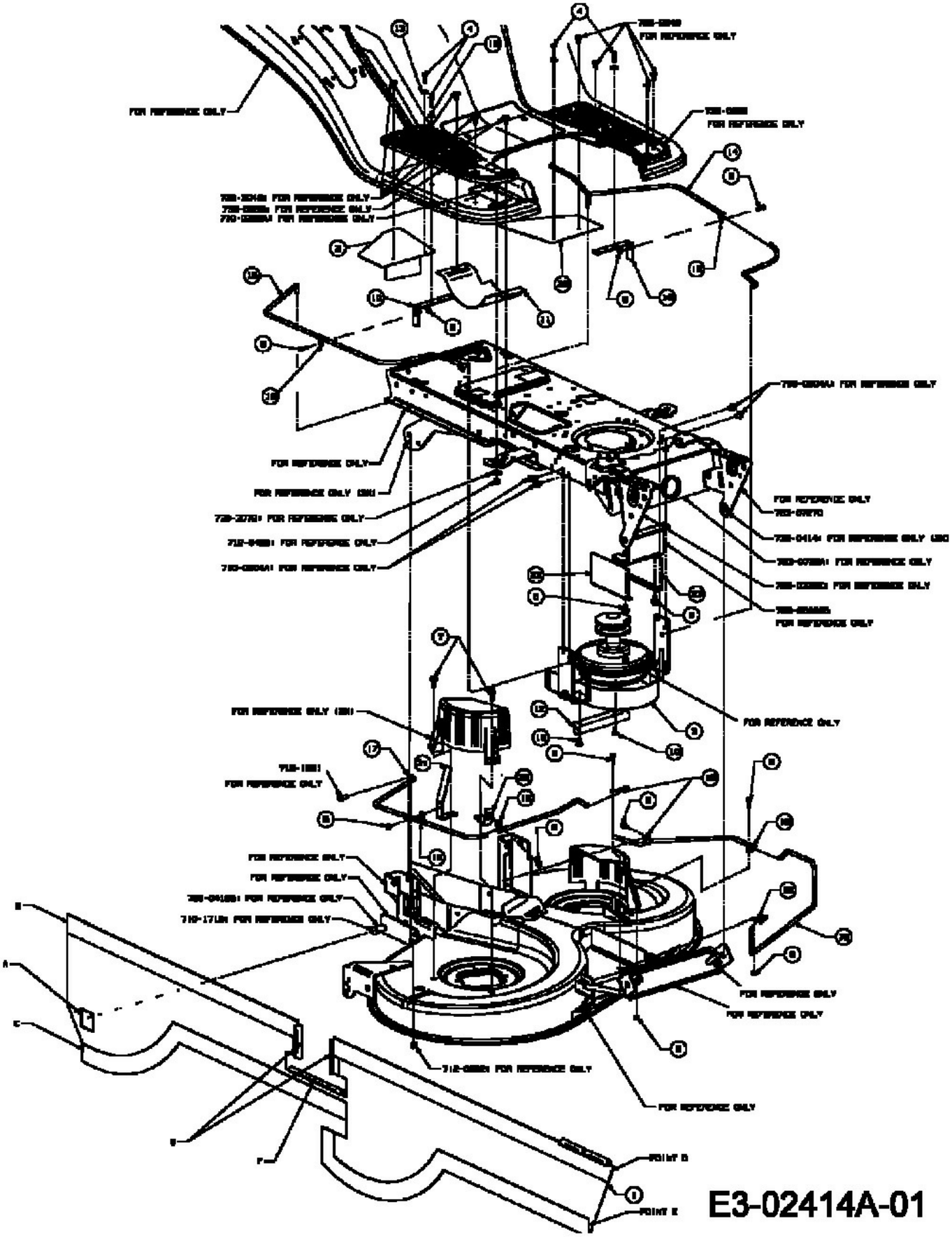
FOR REFERENCE ONLY
POINT D
POINT E
E3-02414A-01