1438 E	18D-G1S-668
1438 E (...CH)	18D-G1S-C68
E 38 W	18D-G7F-676
E 38 W -CH	18D-G7F-664
TS 38 E	18D-G7F-667

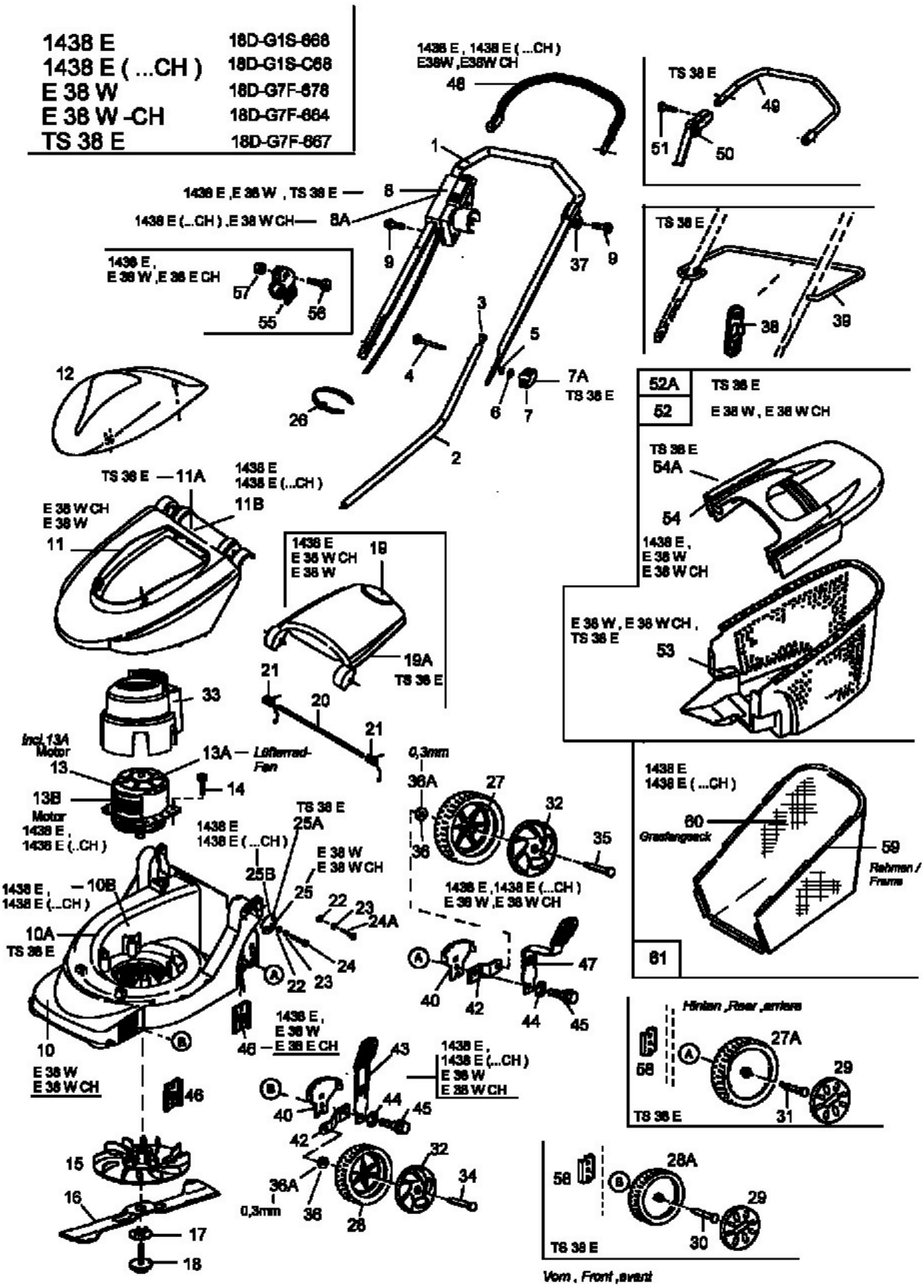

E3-02516A