51 BO	11A-05MD600
51 BO	11A-05MD620
BBM 51 S	11A-05MD619
SILVER STAR	11A-050G635
SILVER STAR	11A-051A635
51 SDC	11A-050M600
51 BO	11A-05MP600
51 BC	11A-050G600
51 BC	11A-050G633
BBM 510 S	11A-051A619

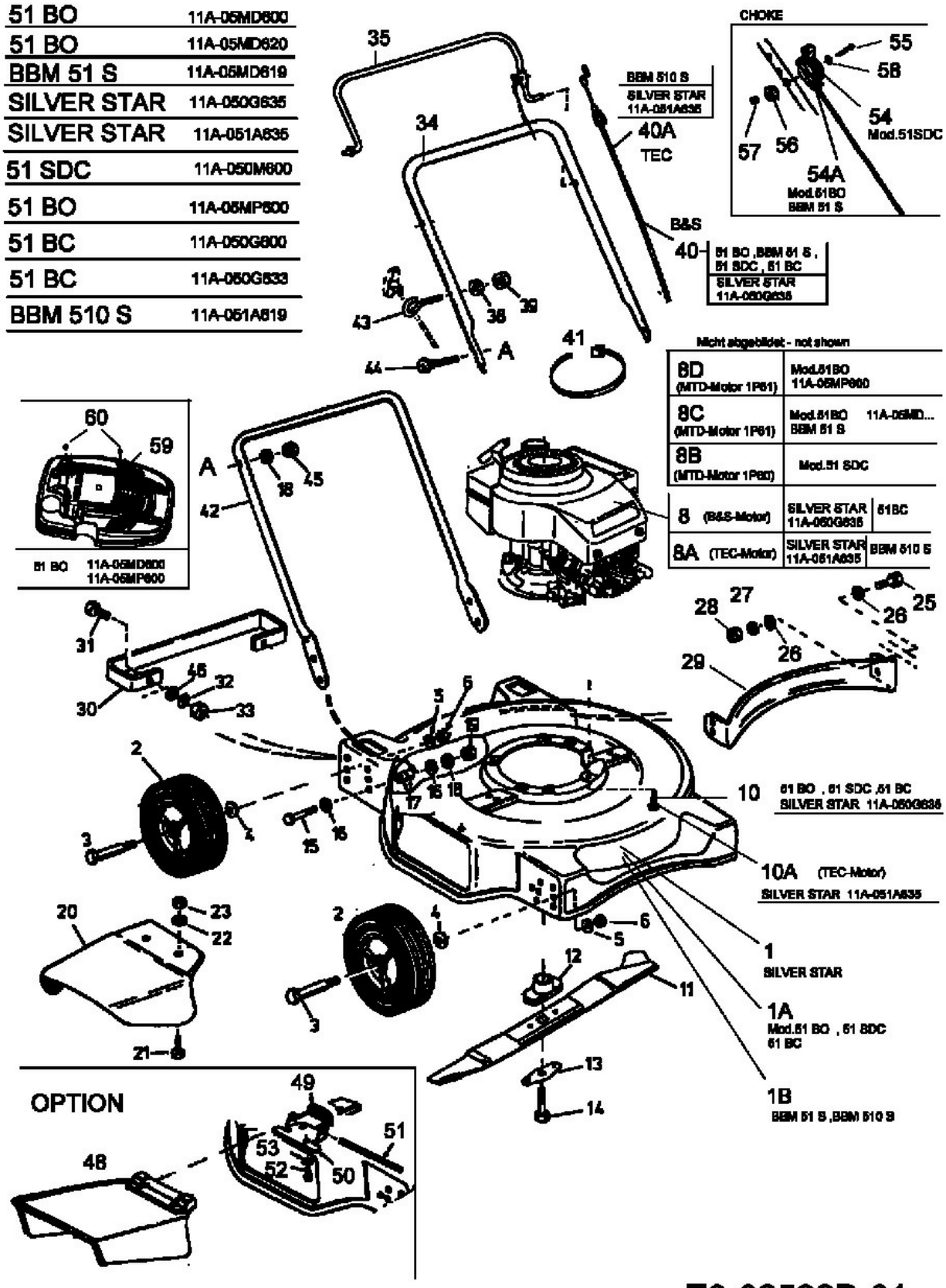

E3-02522B-01