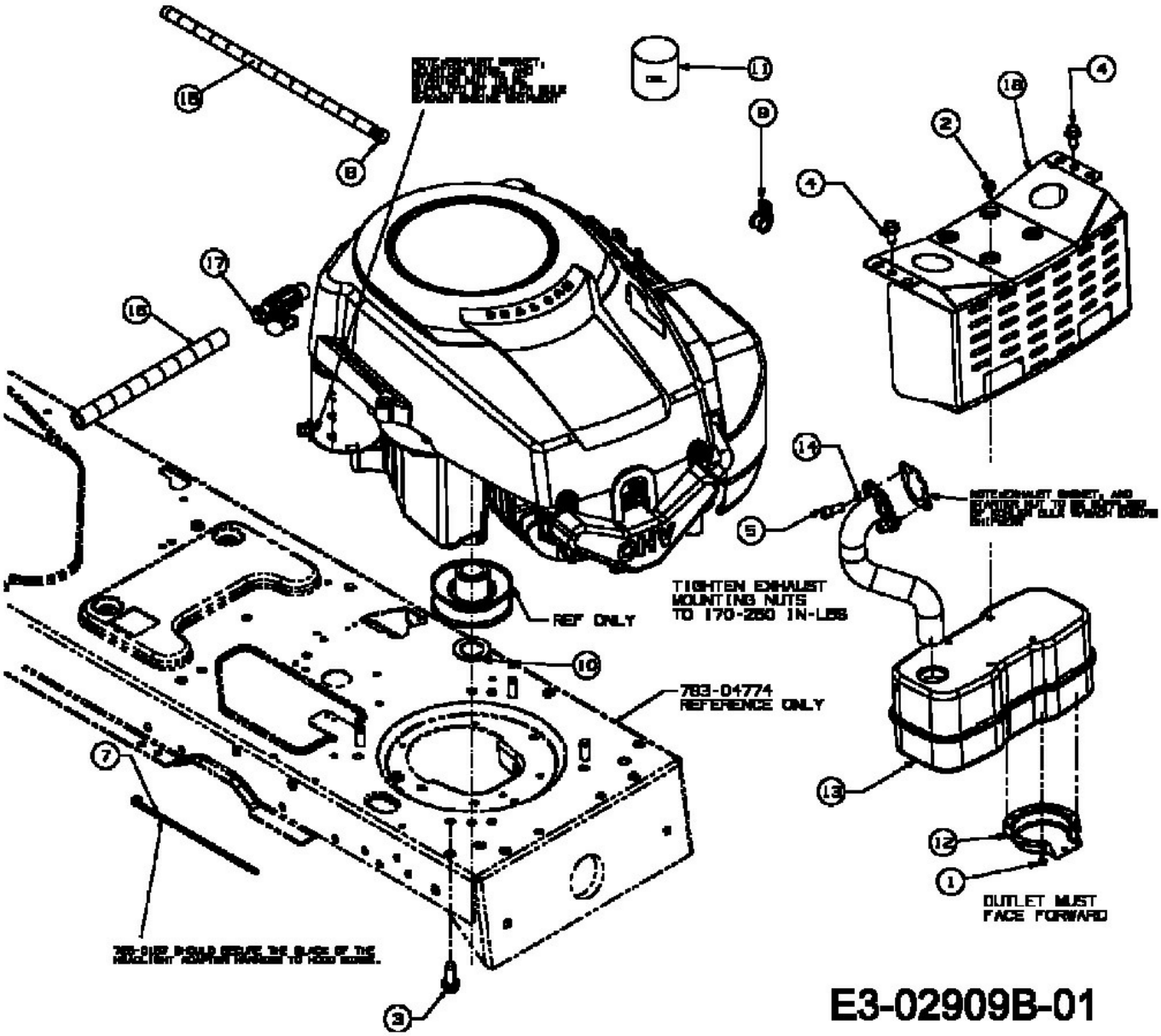
TIGHTEN EXHAUST
MOUNTING NUTS
TO 170-260 IN-LBS
REF ONLY
783-01774
REFERENCE ONLY
OUTLET MUST
FACE FORWARD
E3-02909B-01