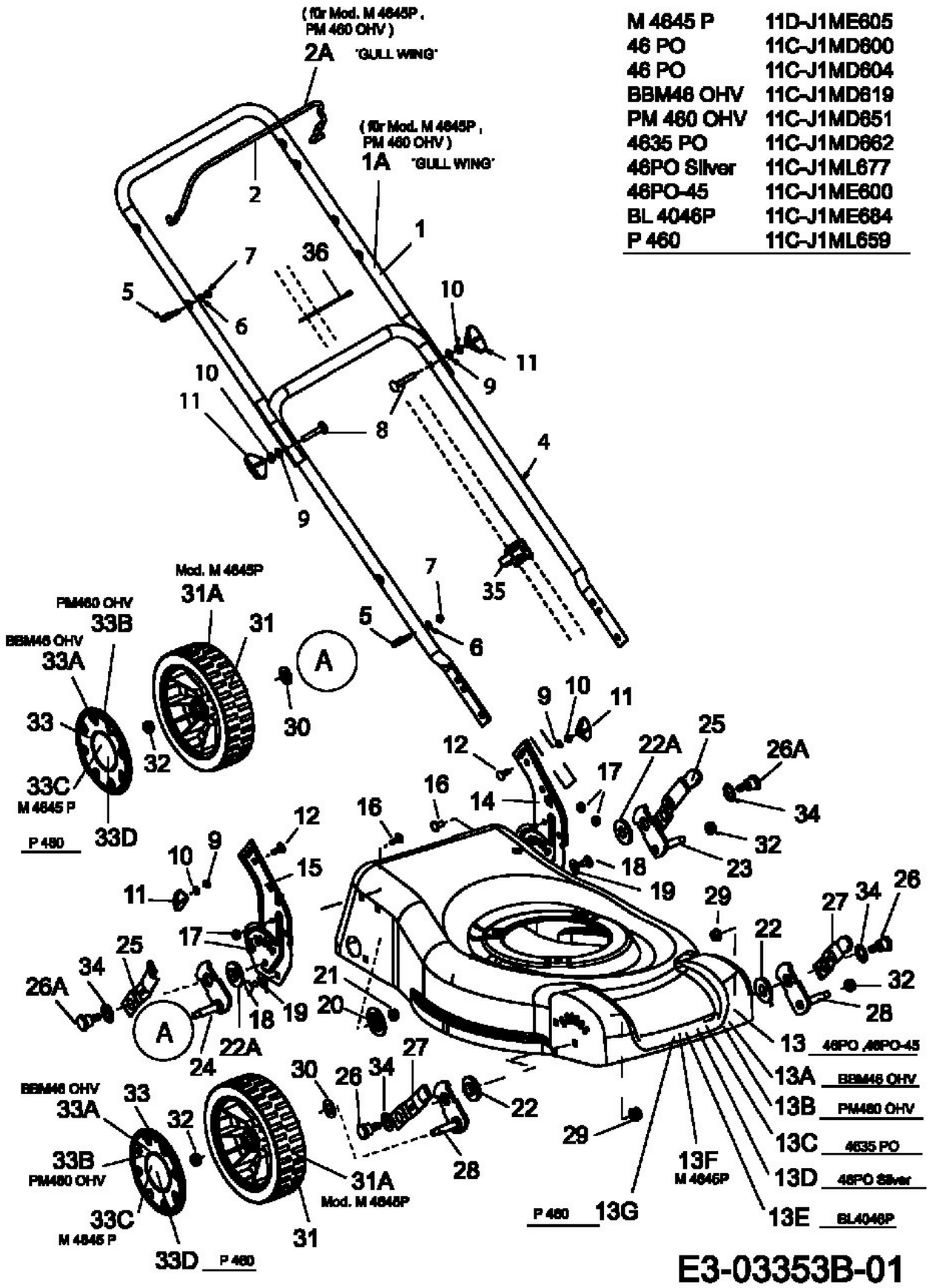M 4645 P	11D-J1ME605
46 PO	11C-J1MD600
46 PO	11C-J1MD604
BBM46 OHV	11C-J1MD619
PM 460 OHV	11C-J1MD651
4635 PO	11C-J1MD662
46PO Silver	11C-J1ML677
46PO-45	11C-J1ME600
BL 4046P	11C-J1ME684
P 460	11C-J1ML659