34-11 E BG 1100 FF 327-1 FF 327-1 FF 327	18B-E0E-600 18B-E0E-625 18B-E0E-634 18BKE0E-634 18B-E1E-665	1100Watt	
FF 328 32-9 E 32-10 E	18B-E0D1665 18B-E0C1600 18B-E0D1600	1000Watt	ohne Kondensator/ w/o Condenser
32-10 E	18B-E0D2600	1000Watt	mit Kondensator/ w/ Condenser

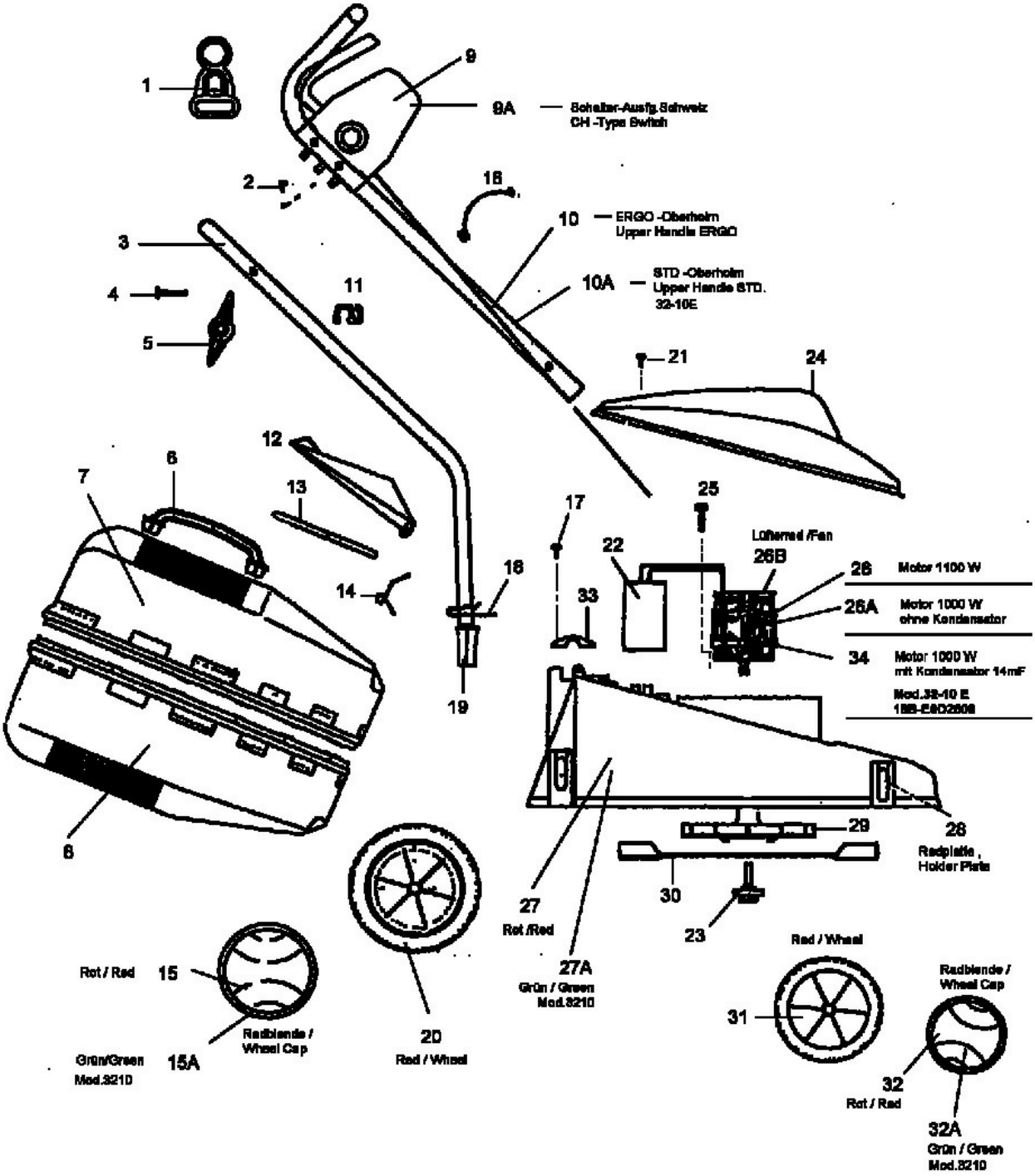

E3-03376B-01