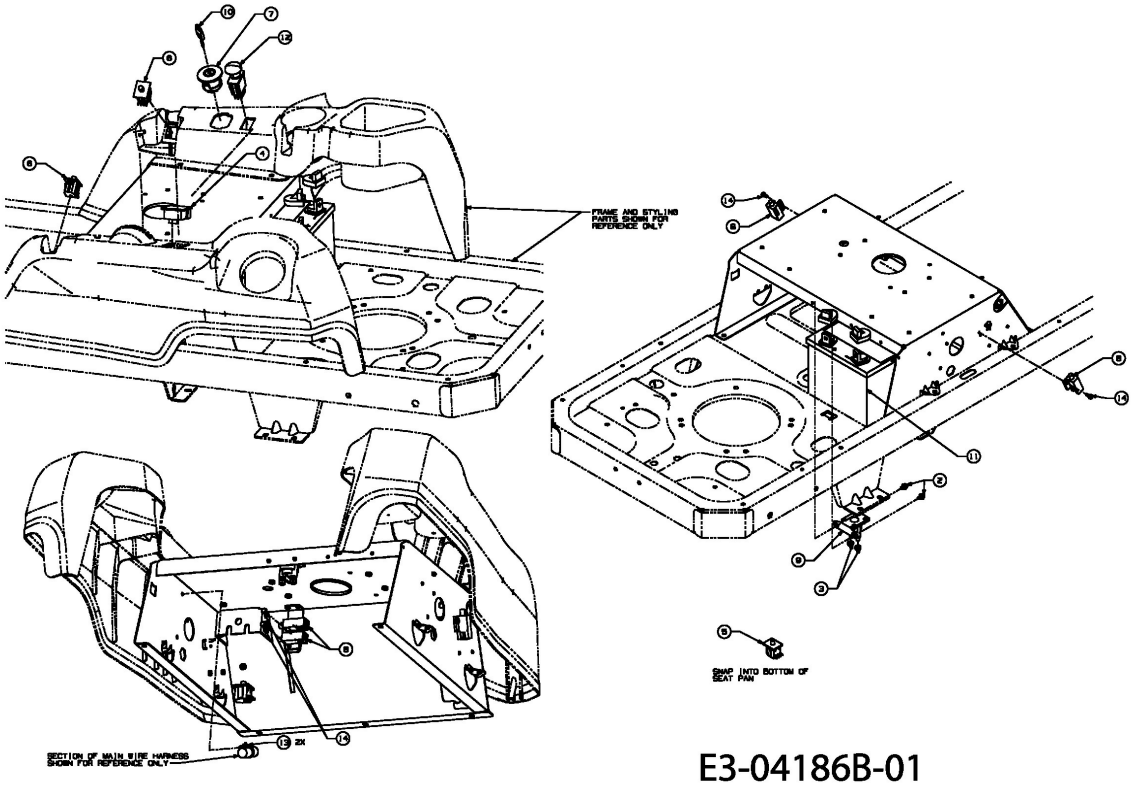
FRAME AND STYLING PARTS SHOWN FOR REFERENCE ONLY
SNAP INTO BOTTOM OF SEAT PAN
SECTION OF MAIN WIRE HARNESS SHOWN FOR REFERENCE ONLY
2X

E3-04186B-01