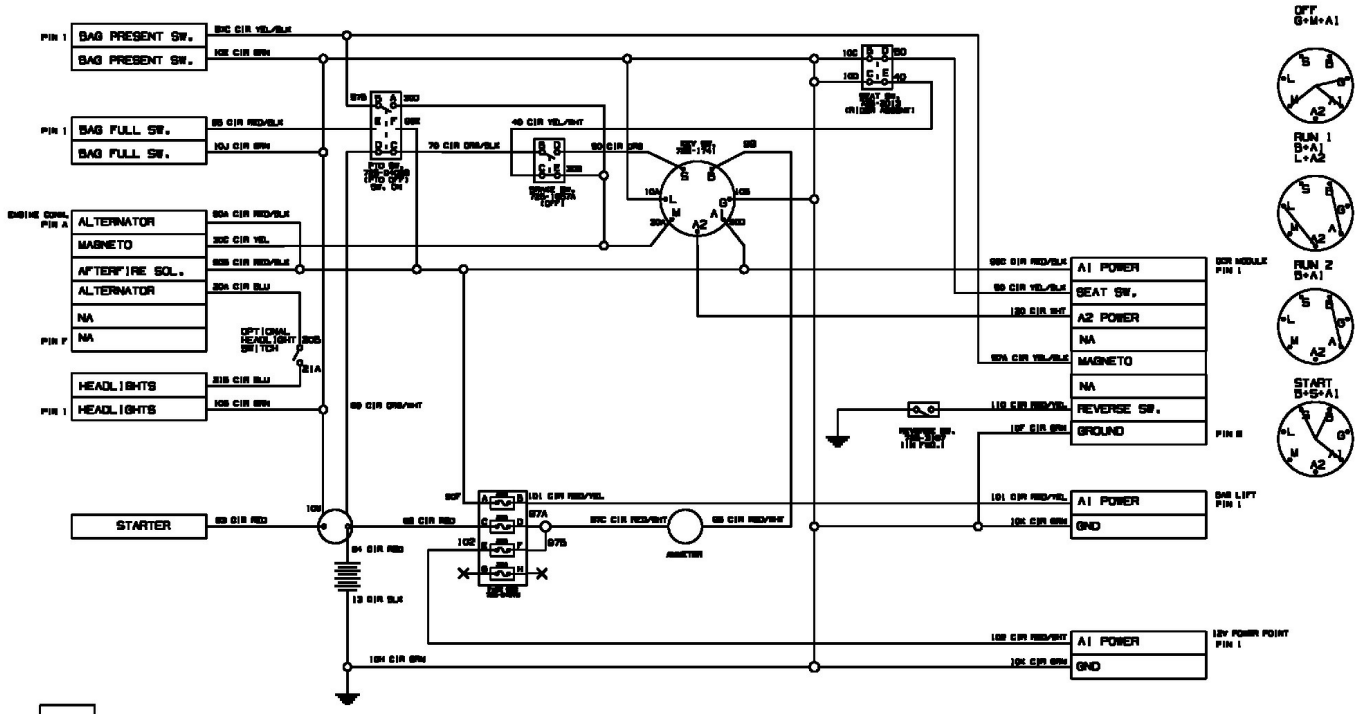
BAG PRESENT SW.
BAG PRESENT SW.
BAG FULL SW.
BAG FULL SW.
ALTERNATOR
MAGNETO
AFTERFIRE SOL.
ALTERNATOR
NA
NA
HEADLIGHTS
HEADLIGHTS
STARTER
A1 POWER
SEAT SW.
A2 POWER
NA
MAGNETO
NA
REVERSE SW.
GROUND
A1 POWER
GND
A1 POWER
GND
OFF
RUN 1
RUN 2
START

11

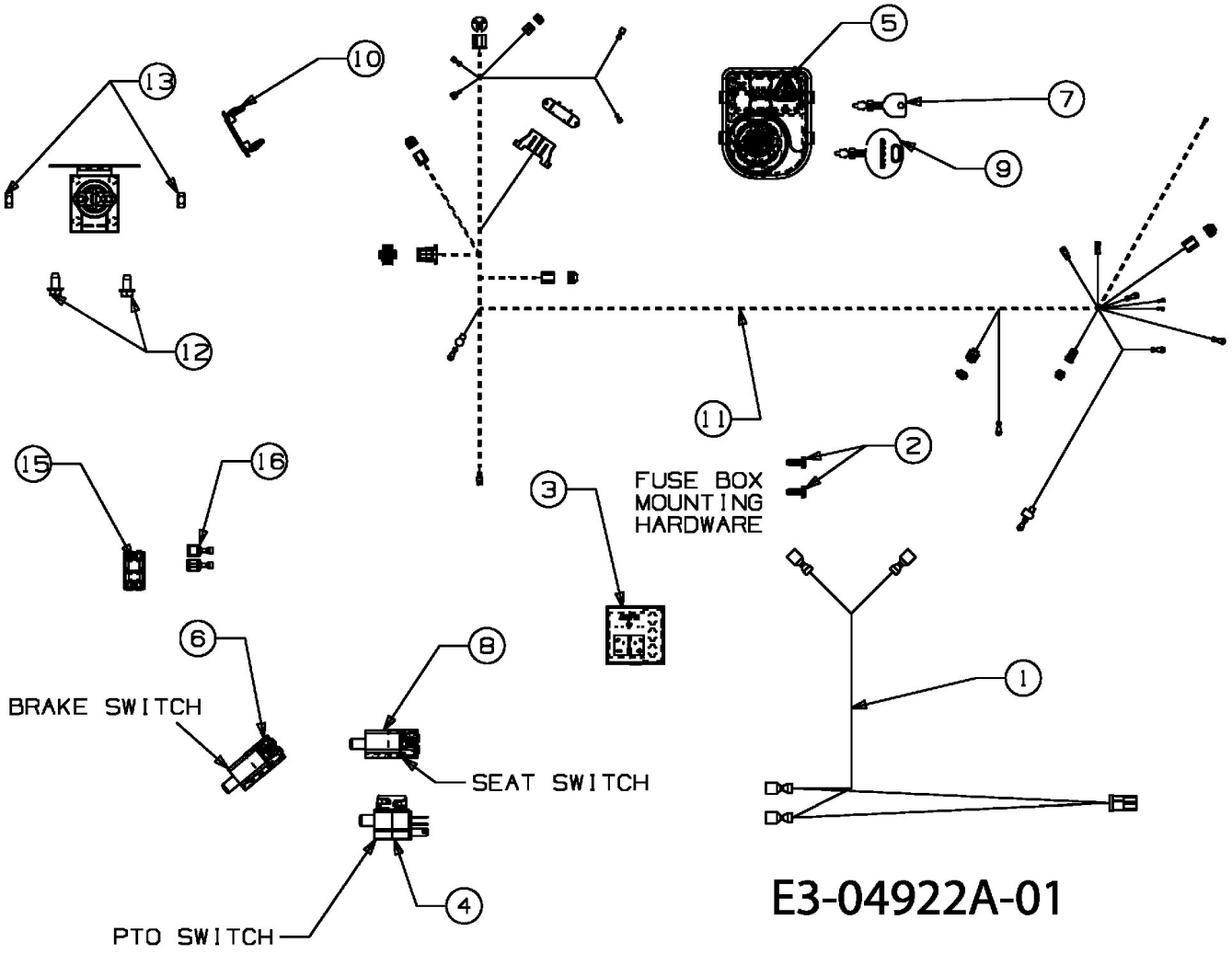
FUSE BOX
MOUNTING
HARDWARE
BRAKE SWITCH
SEAT SWITCH
PTO SWITCH
E3-04922A-01