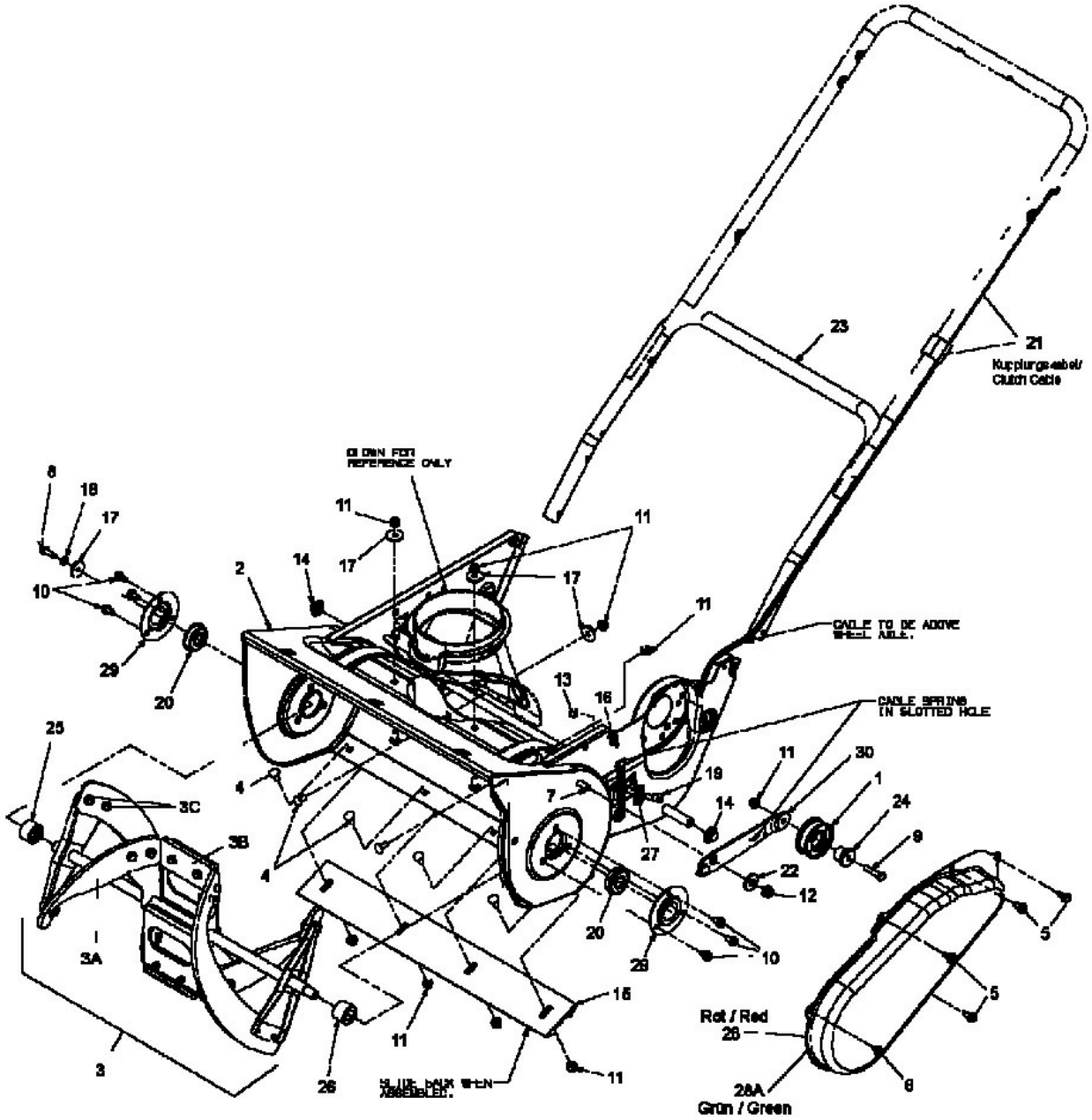
23
21
Kupplungskabel/
Clutch Cable
OLDEN FOR
REFERENCE ONLY
CABLE TO BE ABOVE
WHEEL AXLE.
CABLE SPRING
IN SLOTTED HOLE
Rot / Red
26
26A
Grün / Green
3
3A
3B
3C
26
20
29
10
2
14
17
11
13
16
19
7
27
22
12
1
30
24
9
5
6
15
25
4

E4-01416B-01