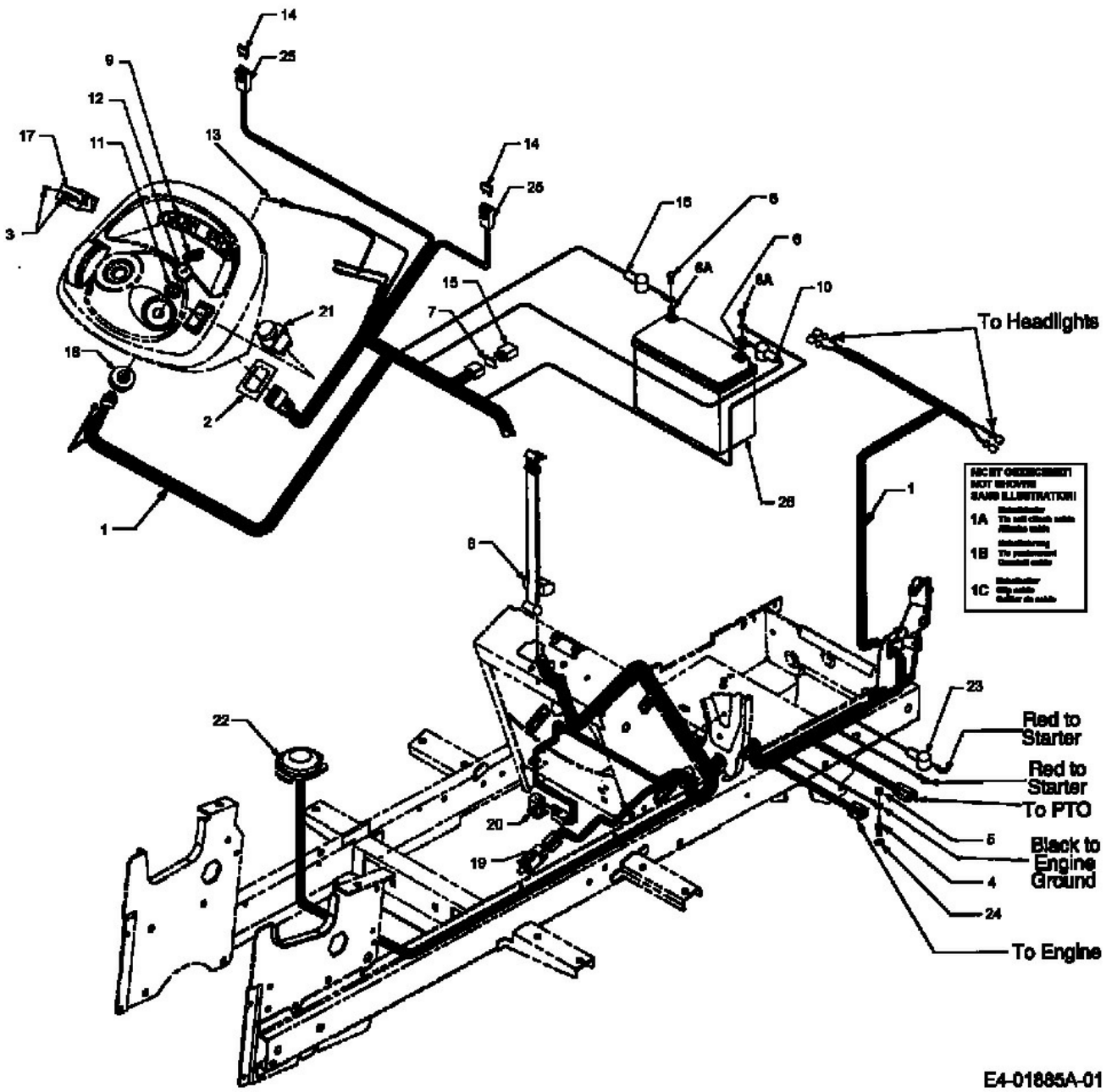
14
25
9
12
17
11
13
14
25
3
15
5
6
6A
6A
10
15
7
21
To Headlights
18
2
1
26
1
8
1A
1B
1C
23
22
Red to Starter
Red to Starter
To PTO
20
5
Black to Engine Ground
19
4
24
To Engine
E4-01885A-01