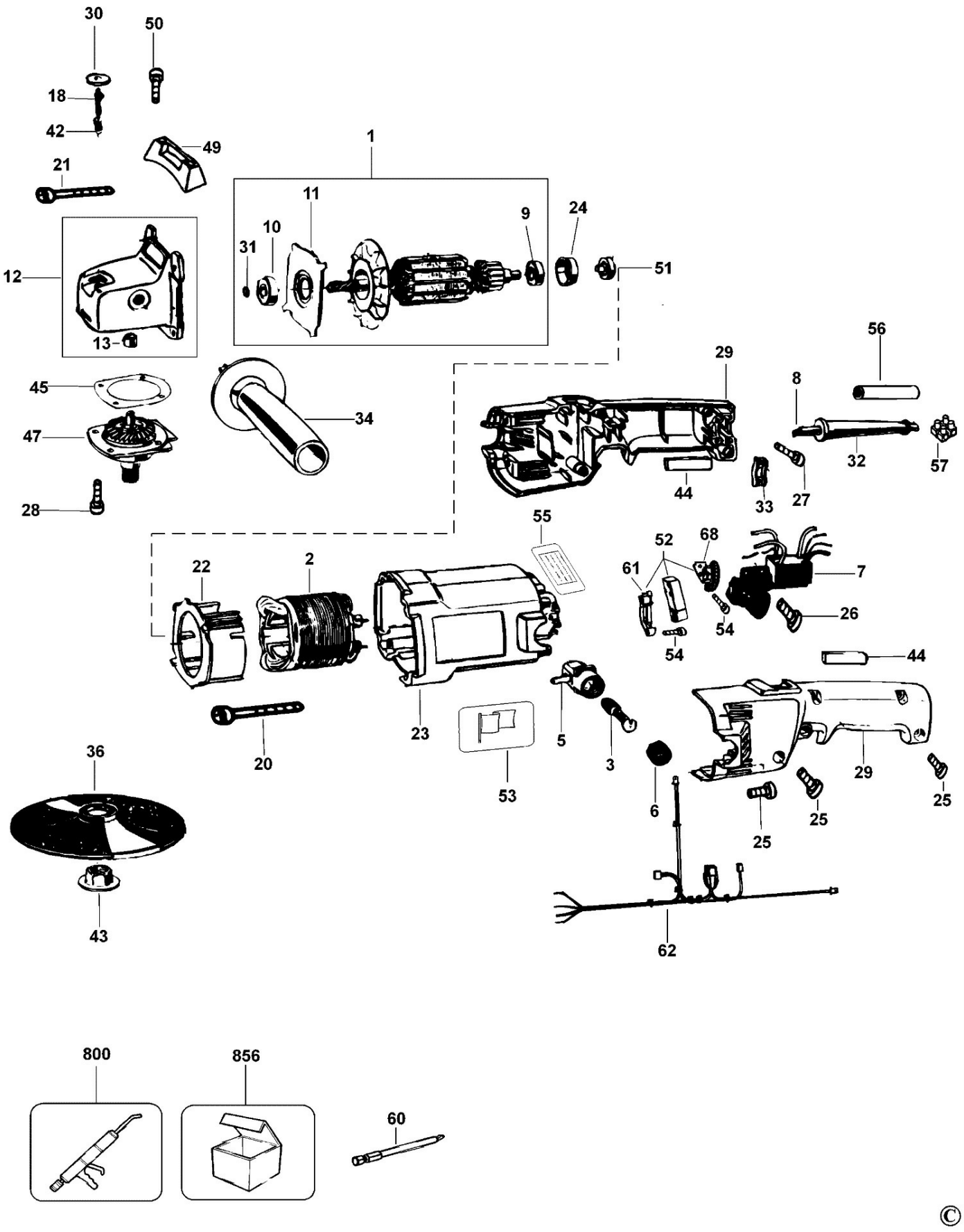
30
50
18
42
49
21
1
11
9
24
10
31
51
12
13
56
29
8
45
34
47
32
57
28
44
33
27
55
52
68
22
2
61
7
26
54
54
44
5
3
23
20
53
36
6
29
25
25
25
43
62
800
856
60

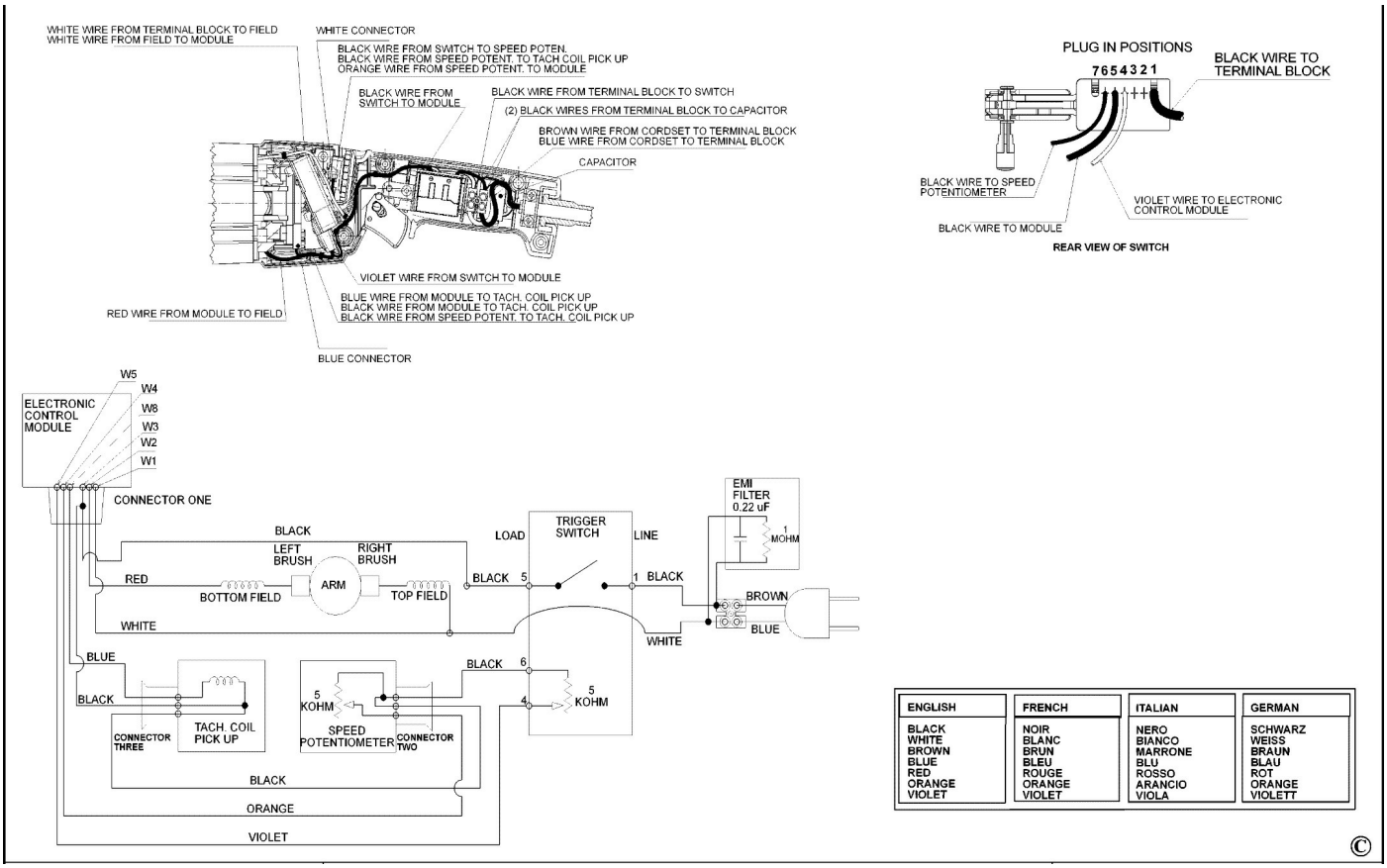

ENGLISH	FRENCH	ITALIAN	GERMAN
BLACK	NOIR	NERO	SCHWARZ
WHITE	BLANC	BIANCO	WEISS
BROWN	BRUN	MARRONE	BRAUN
BLUE	BLEU	BLU	BLAU
RED	ROUGE	ROSSO	ROT
ORANGE	ORANGE	ARANCIO	ORANGE
VIOLET	VIOLET	VIOLA	VIOLETT

©