0 600 884 003

Stand ~~12-06~~
Issue 02-07-17

Fig./Abb. 1

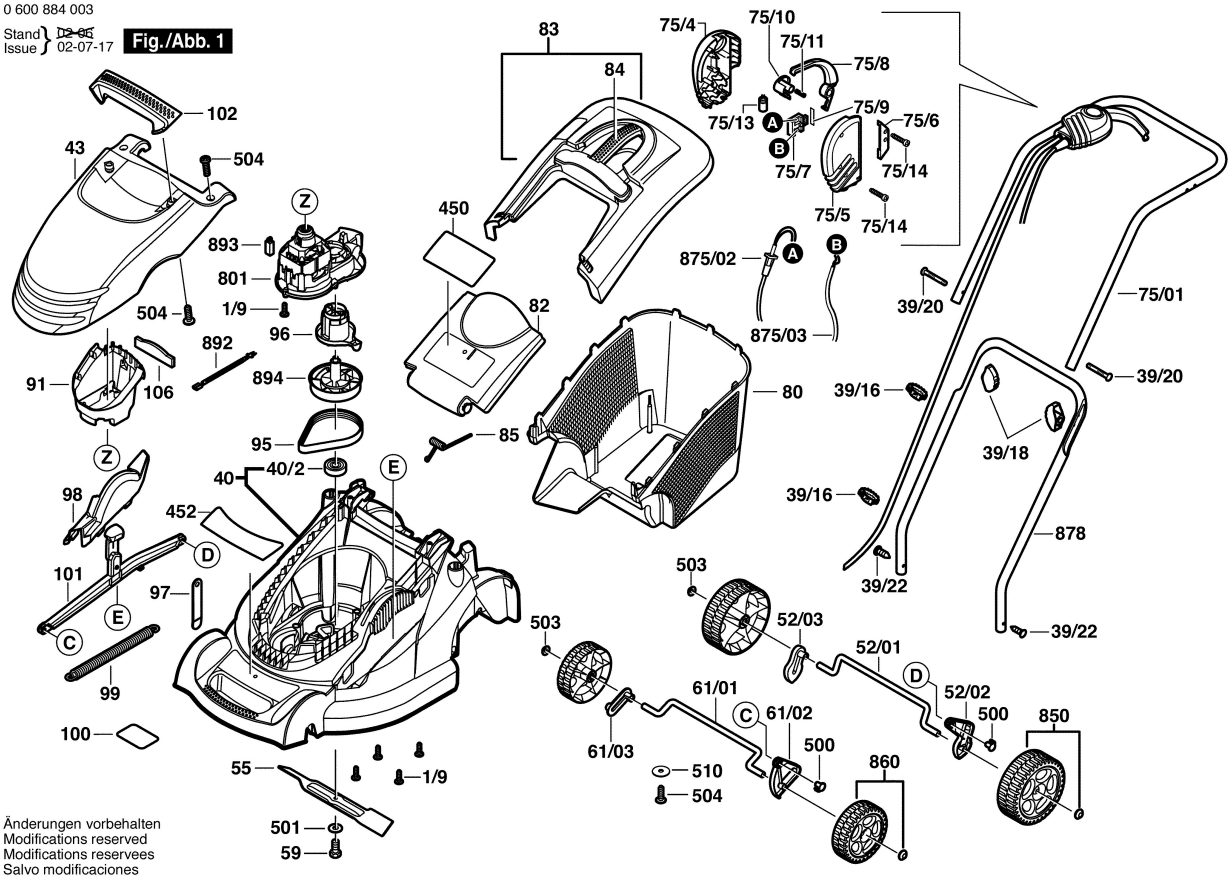

Änderungen vorbehalten
Modifications reserved
Modifications reservees
Salvo modificaciones