0 601 192 803
Stand ~~01-04~~
Issue 02-10-23
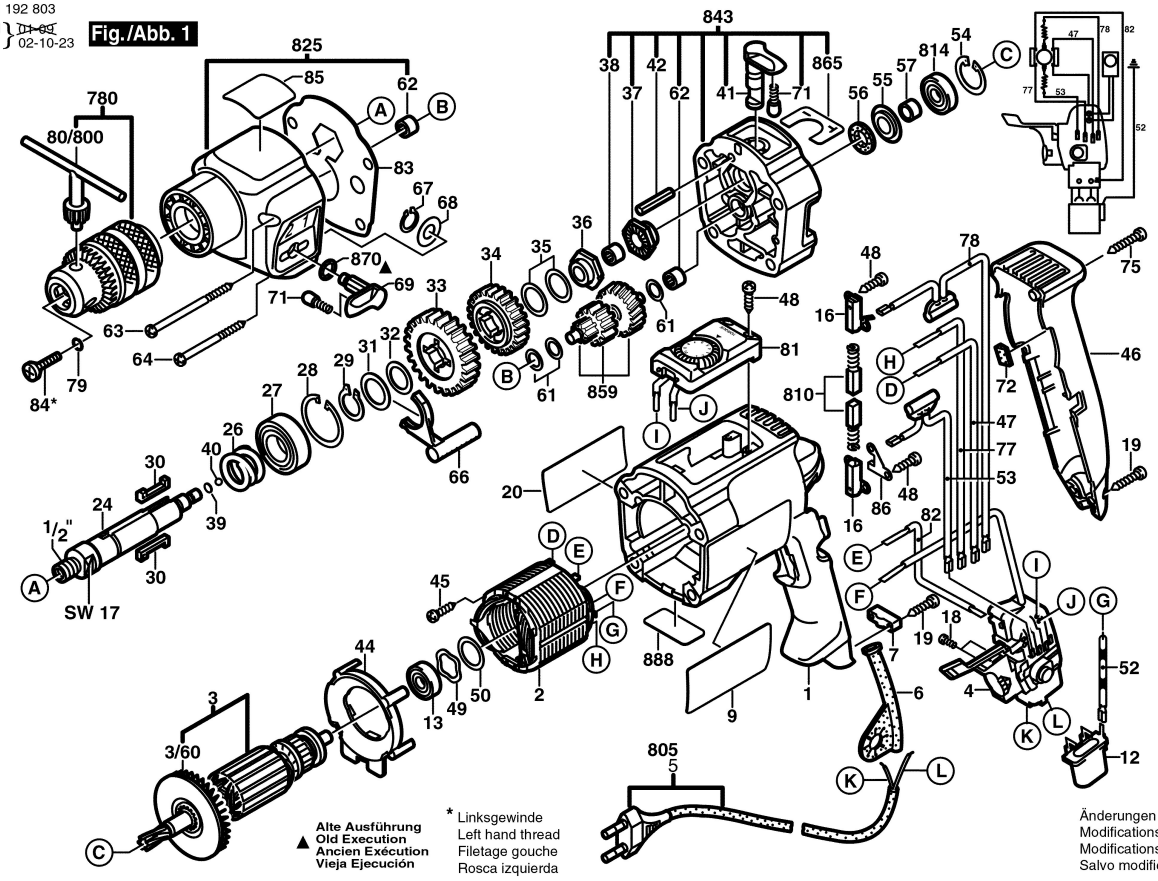
Fig./Abb. 1