0 601 19B 0A2

Stand } ~~09-12~~
Issue } 11-07-26
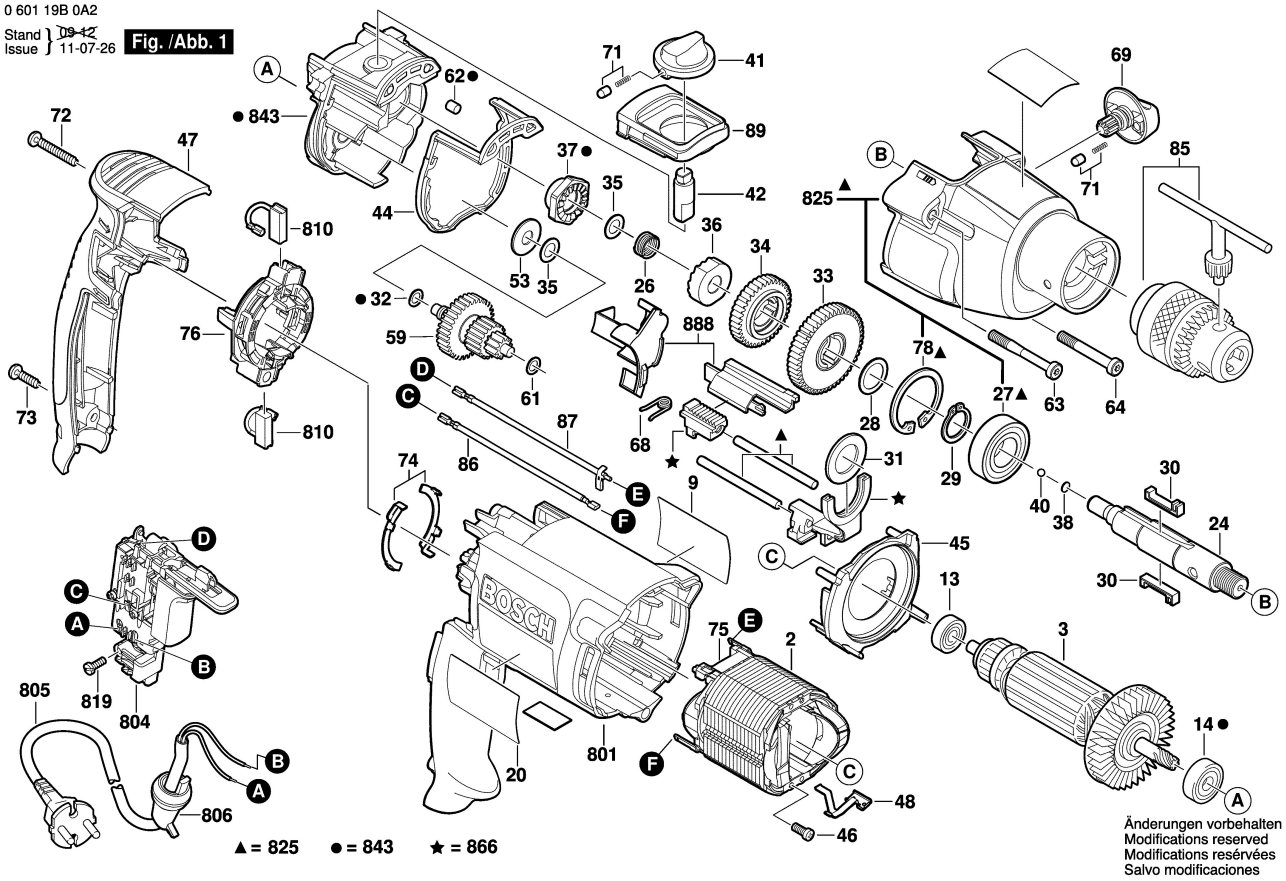
Fig. /Abb. 1