0 601 462 839
Issue Stand } 03-03-14
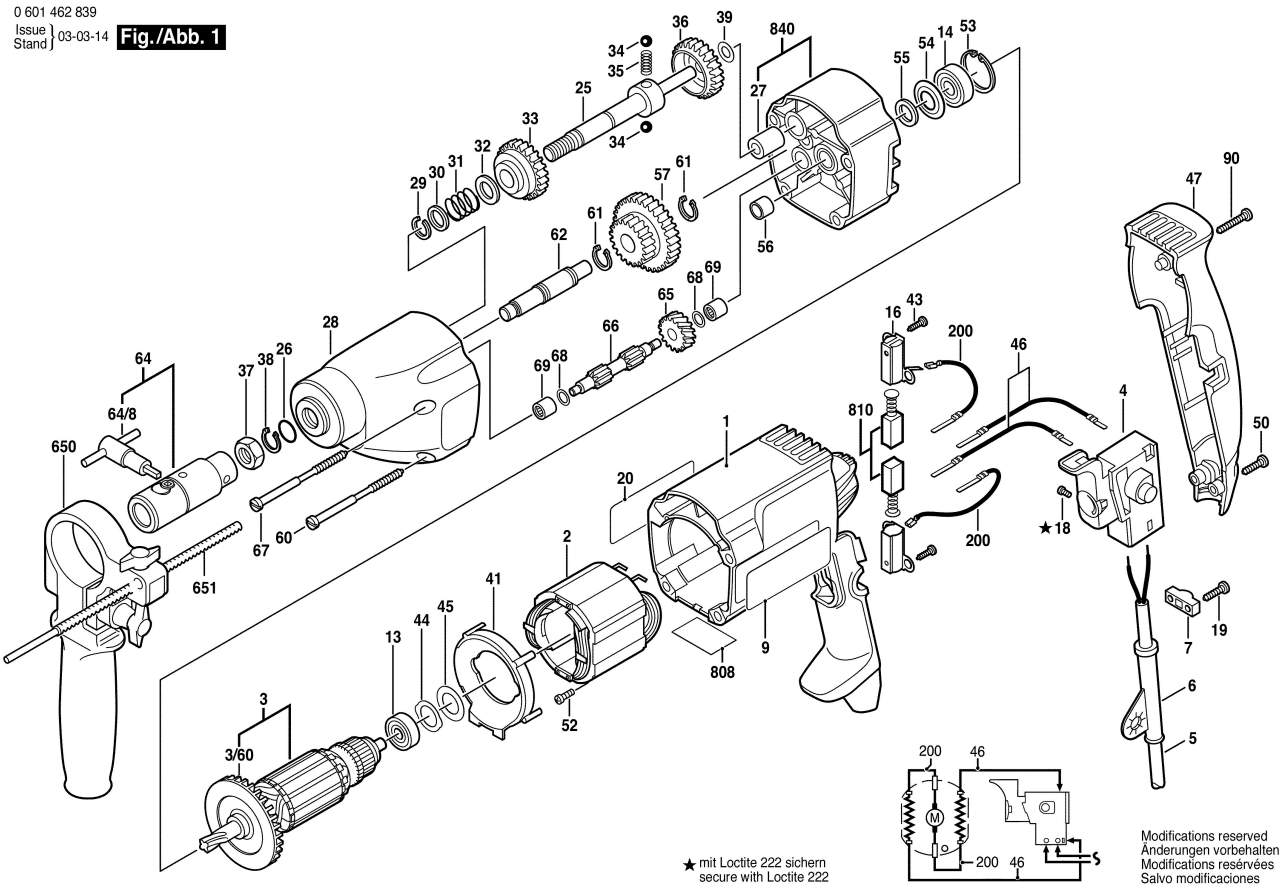
**Fig./Abb. 1**