0 601 613 103
Issue Stand } 01-03-16
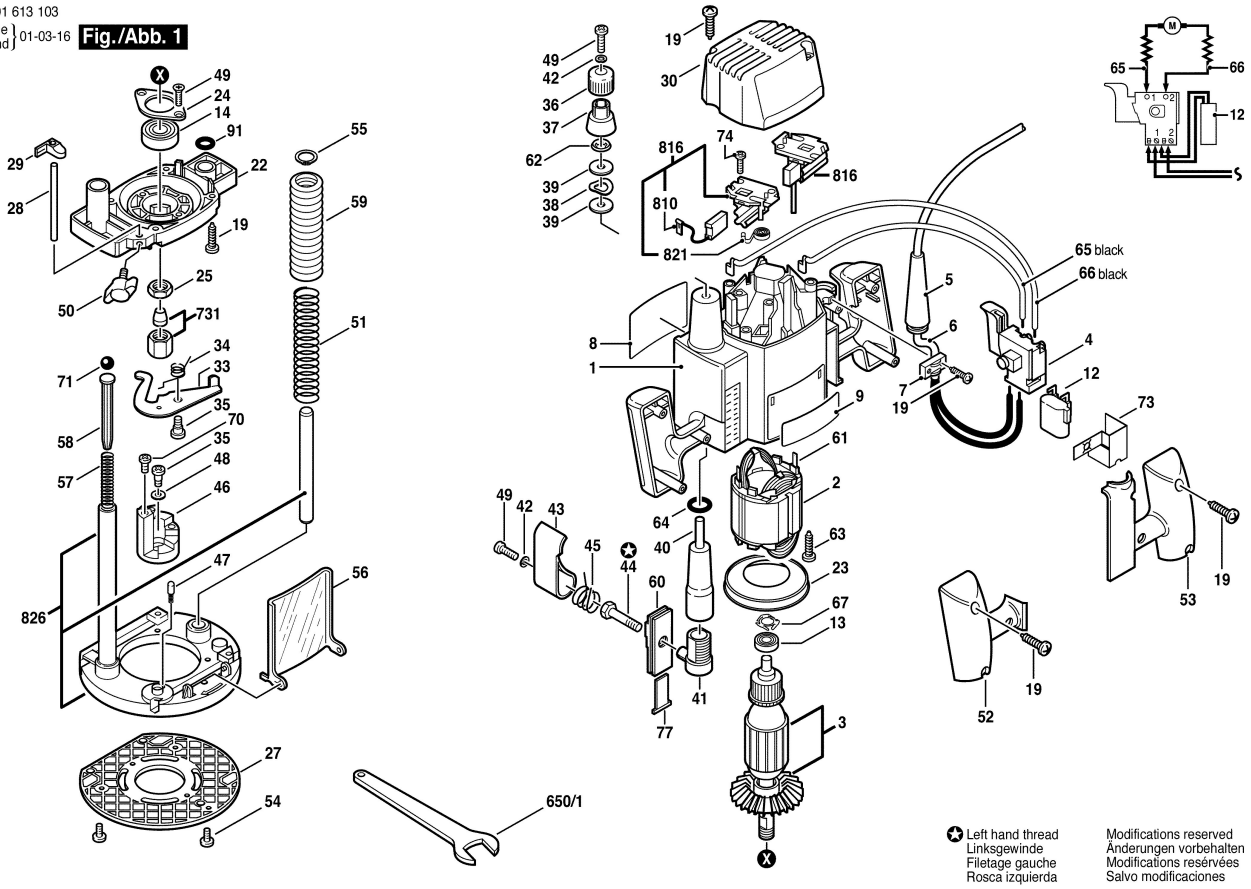
Fig./Abb. 1