0 601 637 703

Issue / Stand } 14-10-22
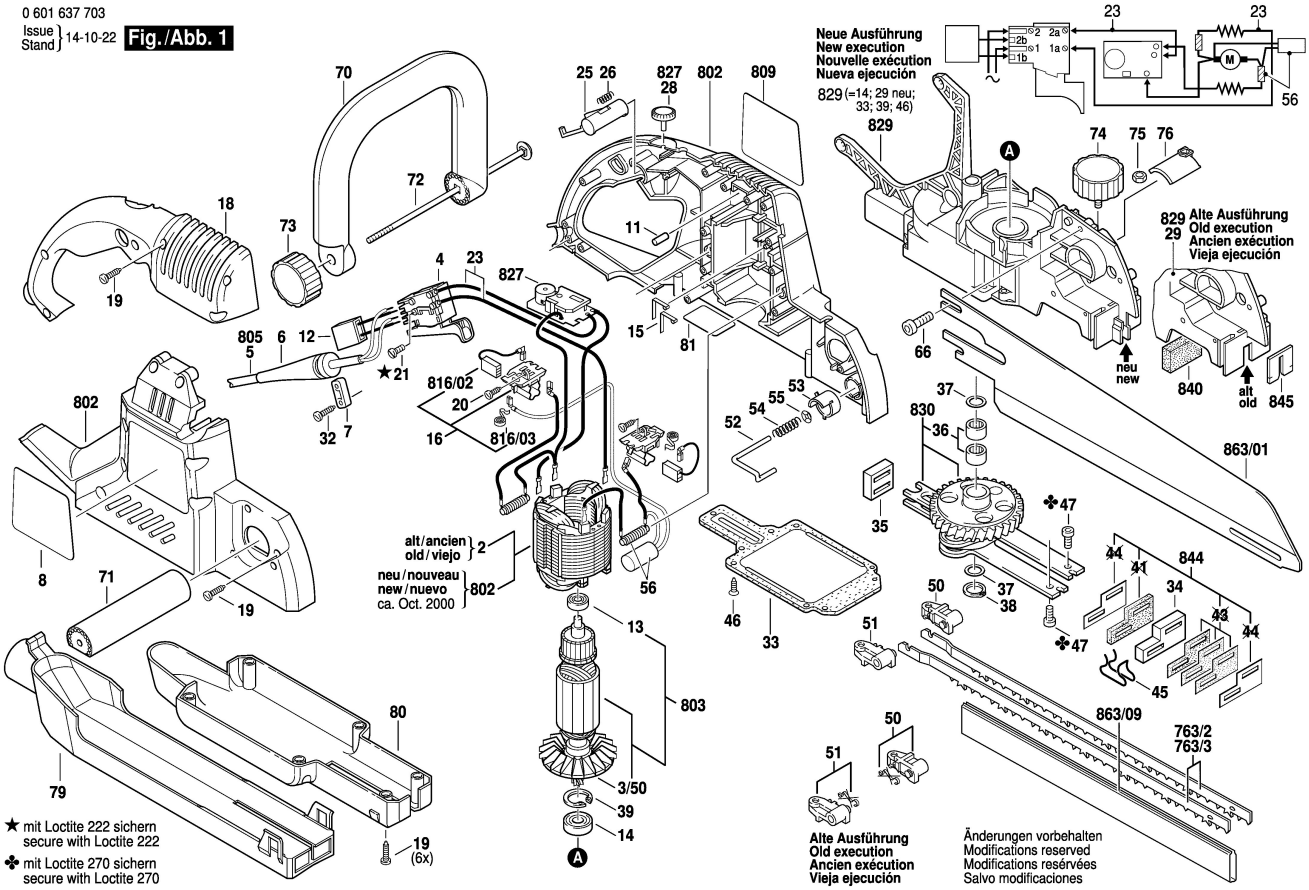
Fig./Abb. 1