0 601 930 560

Stand } ~~95-01~~
Issue } 00-08-02

Fig./Abb. 1

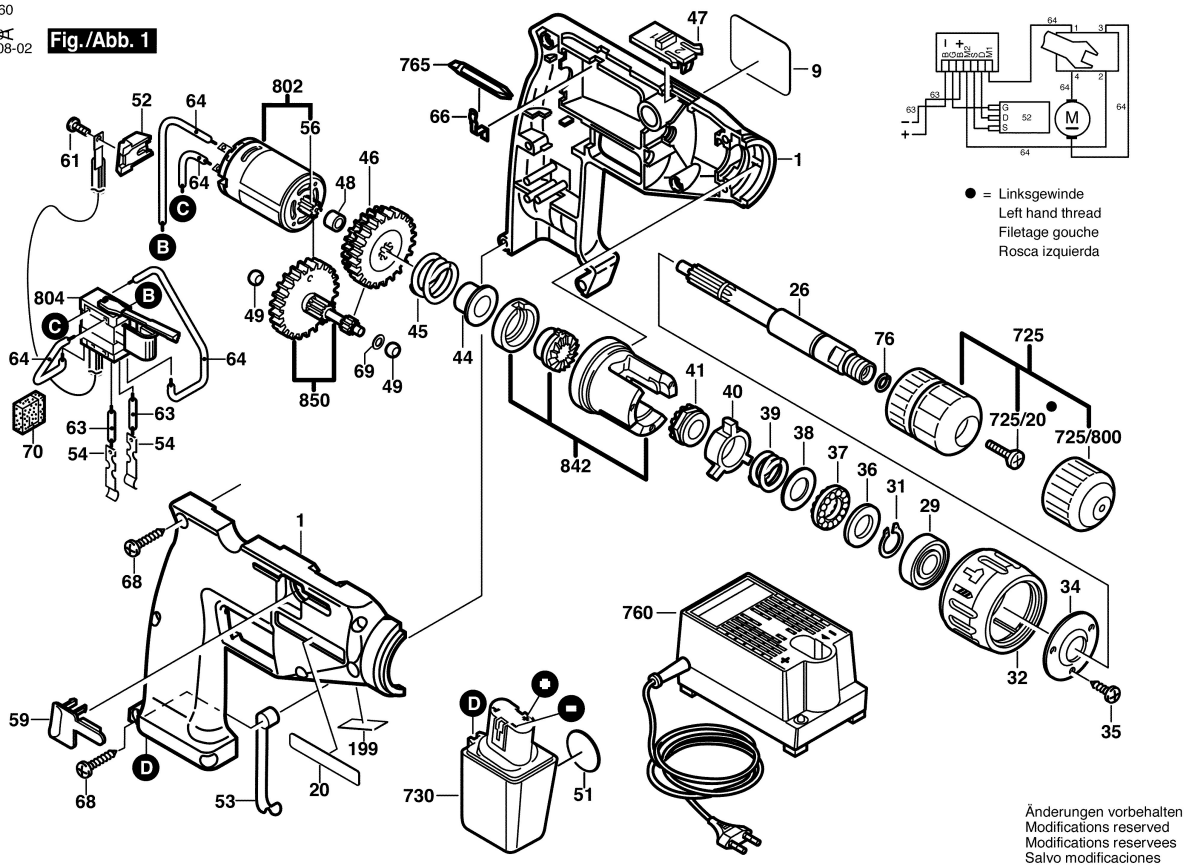

Änderungen vorbehalten
Modifications reserved
Modifications reservees
Salvo modificaciones