Typ 0 603 149 6 . . = **CSB 750 2E**
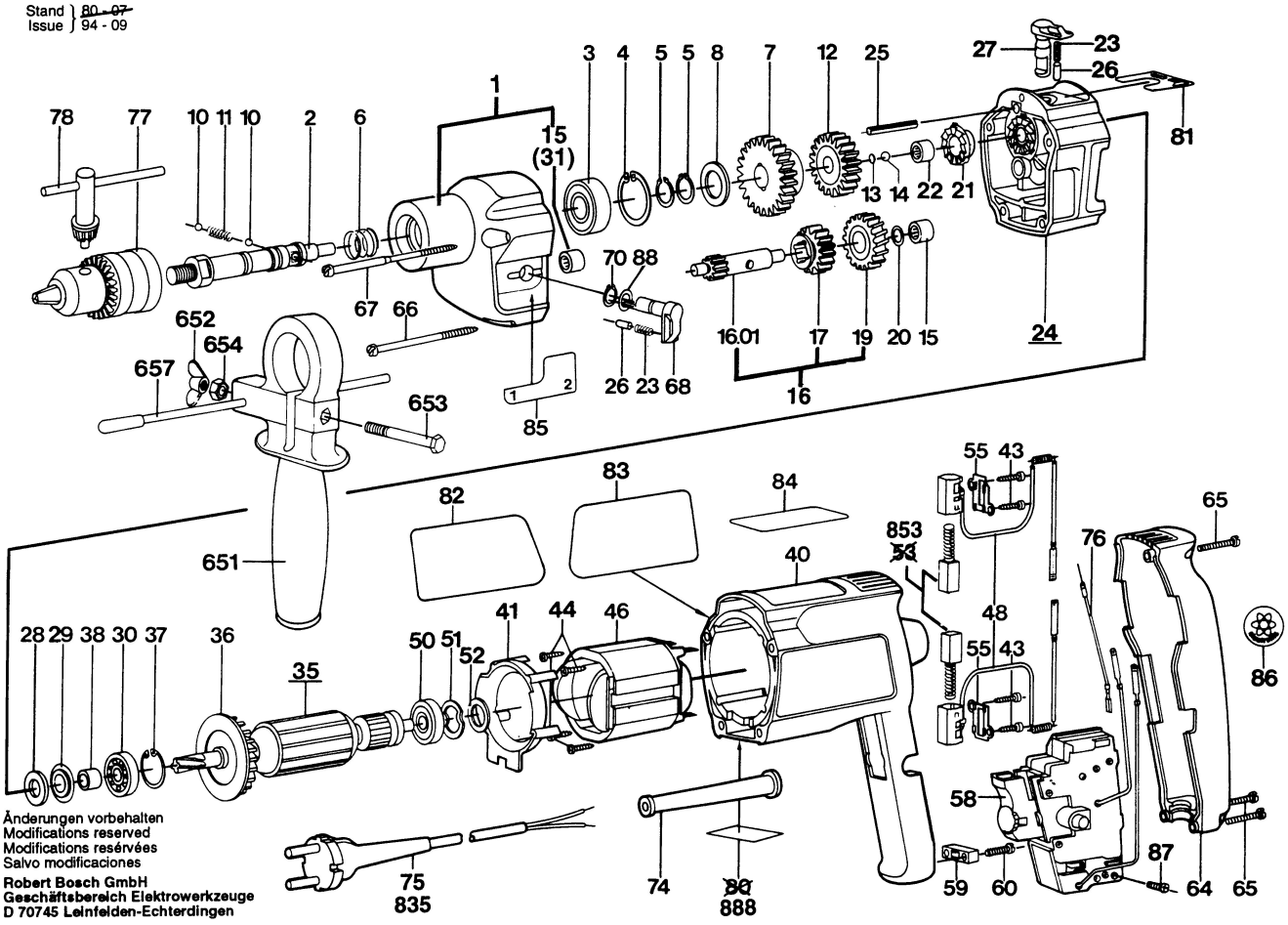
Stand / Issue ~~80 - 07~~ / 94 - 09