0 603 308 703
Issue / Stand 06-10-31
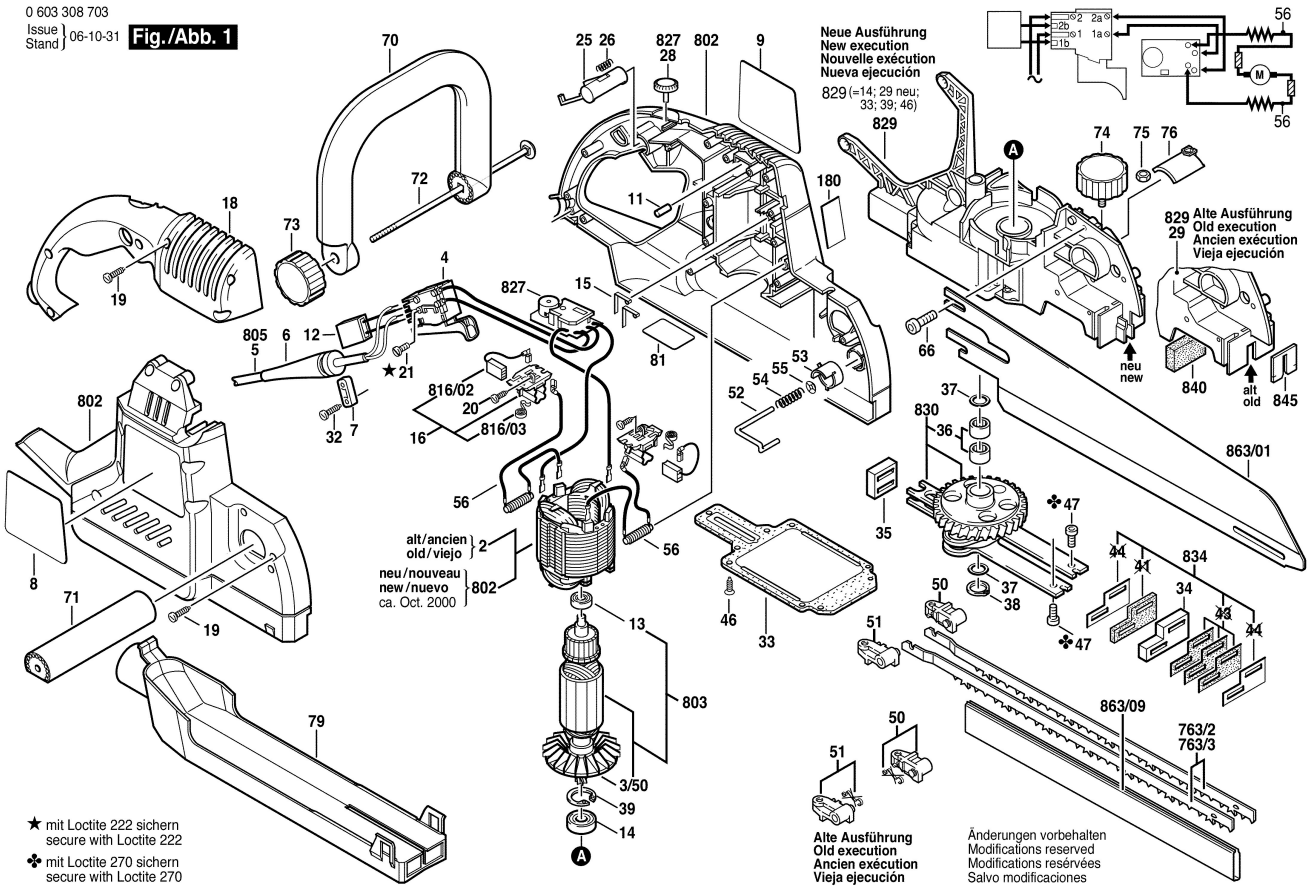
Fig./Abb. 1