0 603 387 503

Stand } ~~13-02-15~~
Issue } 13-02-21

Fig. /Abb. 1

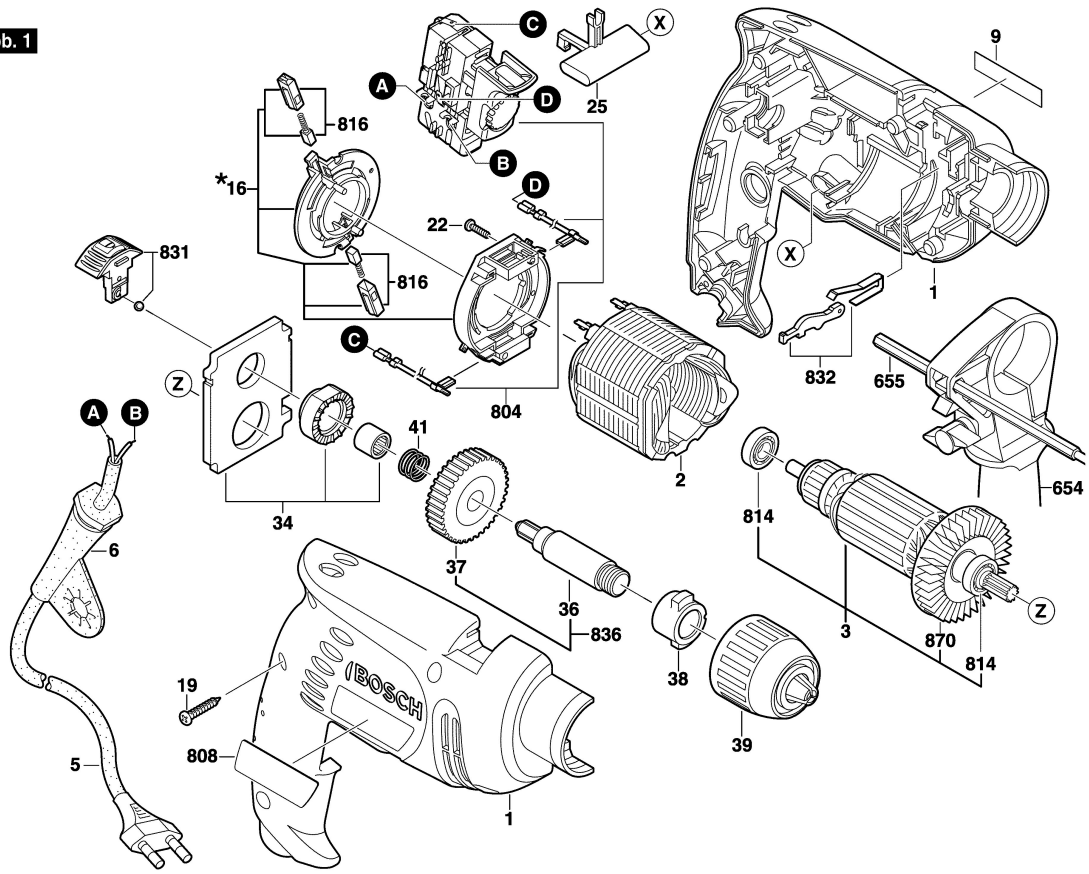

* Montage
assembly
position de montage
position de montage

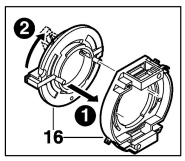

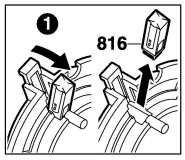

Änderungen vorbehalten
Modifications reserved
Modifications reservees
Salvo modificaciones