0 611 218 703; / 743
Issue / Stand } 06-09-25 **Fig./Abb. 1**

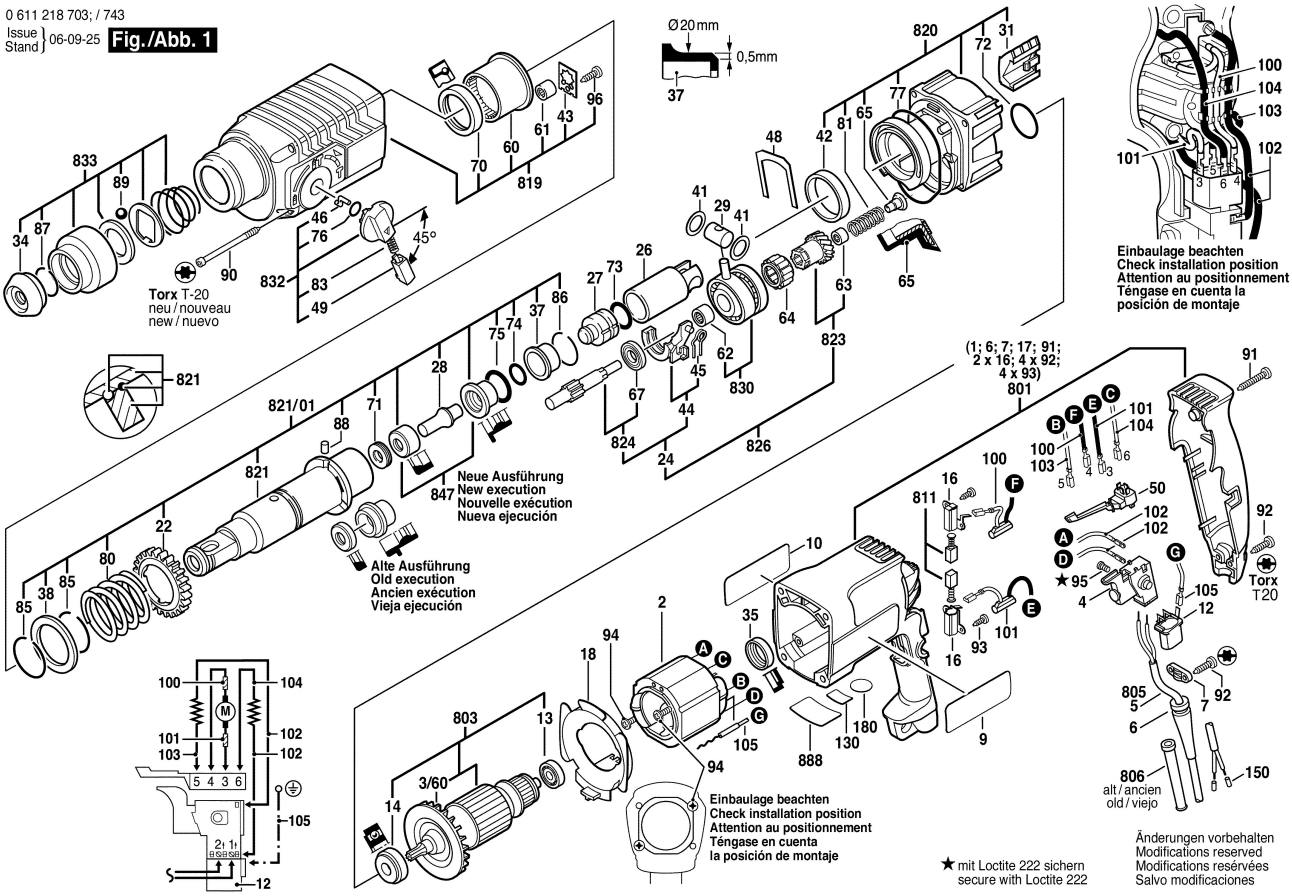
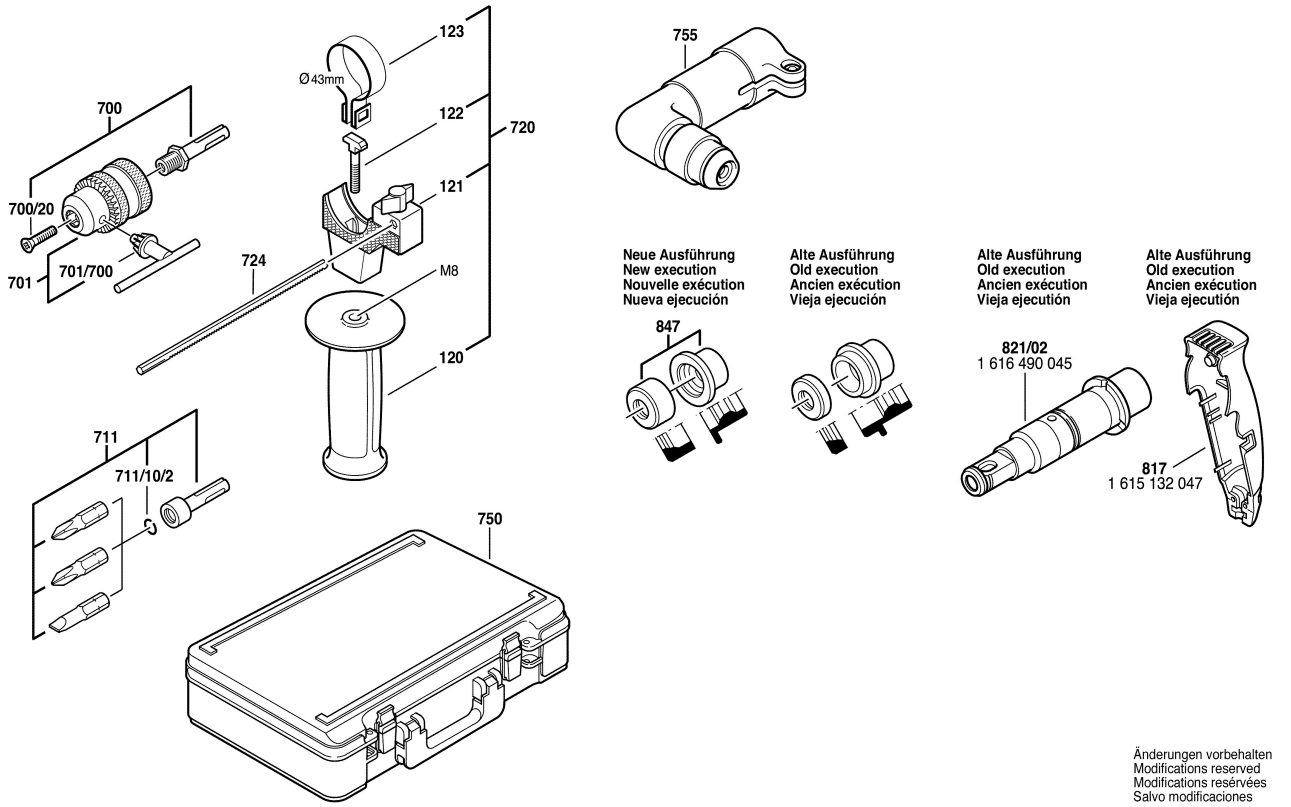
0 611 218 703; 743
Issue / Stand } 06-09-25 **Fig./Abb. 2**